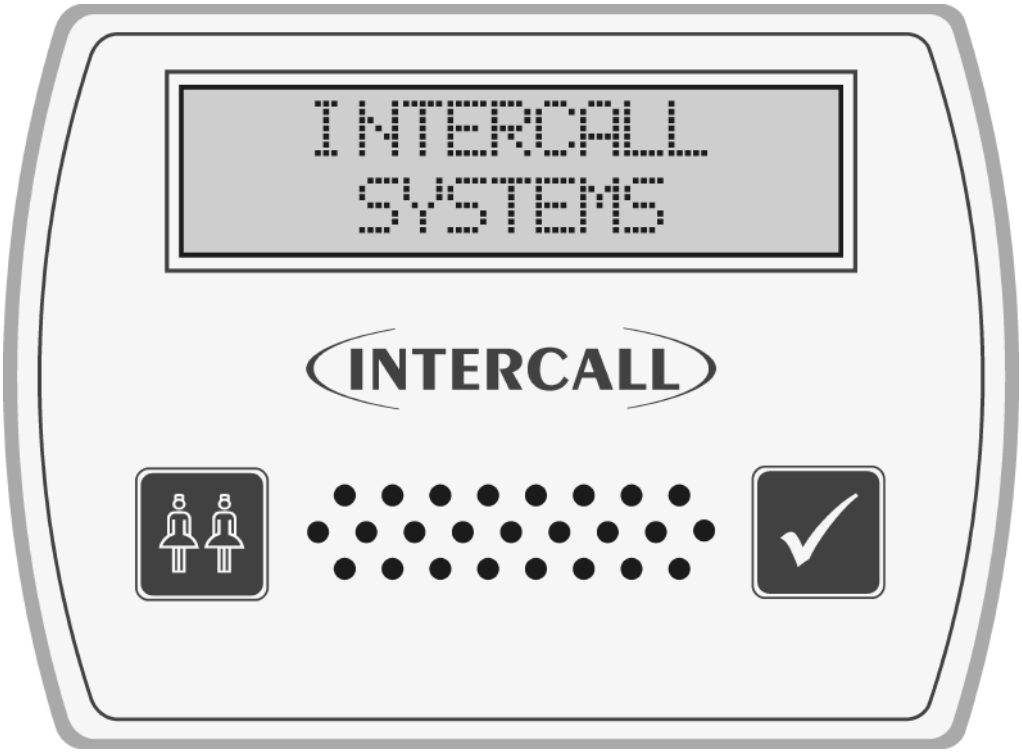

Intercall 600 & Intercall 700
Installation & Operation Guide
Documentation Issue 4.70

No part of this leaflet may be reproduced without prior written consent and while every effort is made to ensure the information contained within this guide is correct, no liability will be accepted for errors or omissions. Intercall is a registered trademark ©2017 all rights reserved.
www.sensorium.co.uk

Index

Introduction to Intercall

	Page
Intercall 600 & 700 Inter-compatibility.....	3

User Guide

Intercall 600 Call Points.....	4
Intercall 600 Display Unit.....	5
Intercall 700 Audio Call Point.....	6
Intercall 700 Audio Display Unit.....	7
Intercall 733 Door and Access Control Unit.....	10
Intercall 700 Call / Display Unit, Overdoor Lights & Other devices.....	11

Installation Guide

System Concepts & Network Cable Requirements.....	12
Planning an Installation.....	13
Using the FJB to split the load.....	14
First Fix.....	16
Second Fix.....	18
System Tests.....	19

Intercall Components & Network Devices

L717 Power Supply Controller.....	20
L7700 IP Power Supply Controller.....	21
L622 Intercall 600 Standard Call Point.....	27
L733 Token Access Point.....	28
L744 RFID Access Point.....	29
L628 600 Series LCD Display.....	30
L748 Large Corridor LED Display.....	31
L746 Overdoor Light.....	32
RB1 Relay Board.....	33
L714 Remote Sounder with Relay.....	34
FJB2 Fused Junction Board.....	35
L758 Audio LCD Display.....	36
L722 Call Point.....	37
L634 Network Input/Output Module.....	38
L752 Audio Call Point.....	39
L753 Audio Call Point.....	40
L762 Audio Call/Display Unit.....	41
CMS-IP Call Management Software	42
TIR4 Infra Red Trigger.....	45
LIMKIT USB System Configuration Kit.....	45
SCP Slave Call Point.....	46
SRP Slave Reset / Present Point.....	47
CS1 Ceiling Pull Switch.....	48
PIR1 Passive Infra Red Detector (For Bed monitoring).....	52
L672 Dementia Controller.....	53

www.sensorium.co.uk

Configuration Guide

System Configuration…….. 55
Display Menu Settings…….. 57
L672 Dementia Controller User Profiles & Menu Settings……. 62
Zoning Configuration…… 64
Zoning Examples…….. 66
Factory Text & Call Point Address Setting…….. 72
Setting the User ID on the TIR4 Triggers……. 45
System Configuration Setting…… 74
L744 RFID Access Point Configuration…… 75

Fault Finding Guide

Call Point Faults…….. 76
Display Unit Faults…….. 77
Power Supply Faults…… 78
Network Faults: Data corruption / Volt Drop / Audio Faults…….. 79

www.sensorium.co.uk

Intercall 600 & 700.

Intercall 600 and Intercall 700 systems share several network devices. The following table highlights the inter-compatibility between the two systems.

Part No	Description	617 PSU	700 PSU	Network Cable	IR Receiver	Current Units
L622	600 Series Non Audio Call Point (Mk2)	✓	✓	2 wire	×	**1**
L722	600/700 Series Non Audio call point with Infra Red	✓	✓	2 wire	✓	**1.5**
L744	700 RFID Door Monitor & Access Control Point	x	✓	2 wire	×	**1.5**
L746	600/700 Triangular Overdoor Light	✓	✓	2 wire	×	**1**
L746s	600/700 Triangular Overdoor Light with sounder	✓	✓	2 wire	×	**3**
L752	700 Series Audio Call Point with Intercom	×	✓	4 wire	✓	**2.5**
L753	700 Series Audio Call Point with Intercom	×	✓	4 wire	✓	**2.5**
L758	700 Series Audio Display Unit with Intercom	×	✓	4 wire	×	**4**
L762	700 Series Audio Call / Display Unit with Intercom	×	✓	4 wire	✓	**2.5**
L628	600 Series Display Unit (Mk2)	✓	✓*	2 wire	×	**4**
L634	600/700 Series Network Input/Output Module	✓	✓	2 wire	×	**1**
L748	700 Series Corridor LED Display Unit	×	✓	2 wire	×	**0**
FJB2	Fused Junction Board Unit (Mk2)	✓	✓	4 wire	×	**n/a**
L747	600/700 Series Universal System Interface	✓	✓	2 wire	×	**4**
L714	600/700 Series Remote Sounder	✓	✓	2 wire	×	**4**
PIR1	Passive Infra Red Bed Monitor	✓	✓	2 wire	×	**1**
SCP	Slave Call Point	✓	✓	-	×	**0.25**
SCPir	Slave Call Point with infra red receiver	✓	✓	-	×	**1**
L730	Slave Infra Red Receiver	✓	✓	-	×	**1**
SRP	Slave Reset/Presence Point	✓	✓	-	×	**0.25**
RB1	Relay Board	✓	✓	2 wire	×	**1**

INTERCALL®
NURSECALL SYSTEMS

Getting In touch with Intercall Nursecall Systems

UK Technical Support Telephone **0870 870 4660**
Export Department Telephone **+44 1403 713240**
Fax **+44 (0)1403 713141**
Email: **sales@intercall.co.uk**
Web: **www.intercall.co.uk**

www.sensorium.co.uk

Intercall 600 User Guide.

Layout of the Intercall 622 and 722 Non Audio Call Point.

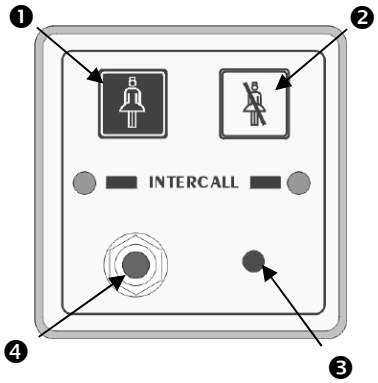

❶ Call button.
❷ Reset button.
❸ Re-assurance light.
❹ Jack socket.

Intercall 600 Call levels and what they mean.

Call – Standard patient call
Assistance – Staff requiring assistance.
Emergency – Staff requiring urgent assistance.
Present – A member of staff is in the room.
Visit – A member of staff has accepted the call at the display and is on their way to the resident.

Making a standard call.

A standard call can be generated by any of the following:

- Pressing the **Call button** on the call point.
- Activation of the pear lead (or other device) plugged into the **Jack socket**.
- Operation of a ceiling pull switch wired to the call point.
- Un-plugging the pear lead from the **Jack socket**.

To confirm a standard call is active, the **Re-assurance light** will flash red one per second.

Staff Present Mode*.

When members of staff enter a room, they must press the **Reset button** on the call point. The call point is now in 'Staff Present' mode and the **Re-assurance light** will show a constant green. Other members of staff can now locate them, by pressing the 'Show Staff' button on any display unit. When they leave the room, they should press the **Reset button** again, this tells the system they are no longer in the room & the **Re-assurance light** is off.

Staff Assistance Call*.

Staff assistance call can only be generated when the call point is in staff present mode and the **Re-assurance light** showing constant green. Pressing the **Call button** will generate an assistance call and the **Re-assurance light** will alternate red, then green, once a second to confirm this action. To cancel the assistance call, press the **Reset Button** once. The call point is now in staff present mode with the **Re-assurance light** showing constant green. To cancel the staff present, press the **Reset Button** again until the **Re-assurance** light is off.

Staff Emergency/Crash Call.

Staff emergency call can be generated at any time by pressing the **Call Button** and the **Reset Button** simultaneously (or pressing the **Emergency Button**). To confirm this action the **Re-assurance light** will showing a rapid red flashing light. To cancel the emergency call, press the **Reset Button** once, the call point is now in staff present mode with the **Re-assurance light** showing constant green. To cancel the staff present mode, press the **Reset Button** again until the **Re-assurance** light is off. On early Intercall 600 systems, unanswered standard calls could be set to time-out and automatically convert to emergency calls.

Call Accepted.

To avoid several members of staff from responding to a single call, calls may be accepted from any display unit. To accept a call, wait until the call you wish to accept is on the top line of the display and press the **Accept Button**. The call point **re-assurance light** will flash green to let the resident know that staff are on their way. The call point will return to the calling condition if the call point is not reset within a pre-set time period. Only standard calls and assistance calls can be accepted.

** Features highlighted in this way, may be disabled by the commissioning engineer.*

Using Intercall 600 Display Units.

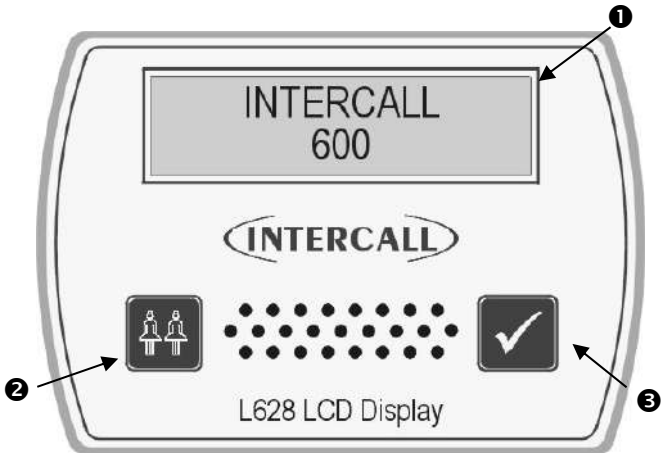

Intercall 600 Call levels and what they mean.

Call – Standard patient call
Assistance – Staff requiring assistance.
Emergency – Staff requiring urgent assistance or standard calls which have 'timed-out'
Present – A member of staff is in the room.
Visit – A member of staff has accepted the call at the display and is on their way to the resident.

❶ Two line LCD display. ❷ Show staff button. ❸ Accept call button.

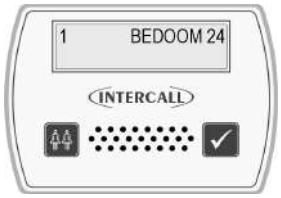

Standard Call.

A standard call will make a short uninterrupted tone, which repeats every 2 seconds. The number shown on the left identifies the queue position, where the lowest number is the oldest call. The right hand side of the display shows the call location. In the example to the left, there is a call from "BEDROOM 24".

More than one Call.

When more that one call is active, the calls are scrolled on the display with their respective queue position.. On the example shown to the left, we have two active calls "BEDROOM 24" is the oldest call and is in queue position 1. The call from "DINING ROOM" is more recent and is given queue position 2.

Assistance Call*.

An assistance call will make two short tones which are repeated every two seconds. On the illustration to the left, there is a standard call from Bedroom 14 and an assistance call from the Dining Room. The 'A' after the call number identifies the call as an assistance call.

Accepting a calling resident. (Accept Call/Visit)

To prevent several members of staff from responding to the same call, calls are 'accepted' at the display units. To accept a call, simply wait until the call you wish to accept is shown on the top line of the display, then press the **Accept Call** button. It is only possible to accept Standard and Assistance calls shown above.

Emergency Call.

An emergency call will make a fast series short tones which are repeated continuously. On the illustration to the left, the word 'EMERGENCY' indicates the urgency of the call. The accept facility is <u>not</u> available on emergency calls and the staff must attend the room to reset. When an 'emergency' call is active, all other calls are held in memory but only displayed when the emergency call is reset.

Locating other members of staff.

To locate other members of staff either in residents rooms or on their way to respond to calls, simply press and hold the **Show Staff** button on any display panel. On the illustration to the left, a member of staff is present in Bedroom 14, indicated by the small 'P' and a member of staff has accepted and is visiting the call from the Lounge, indicated by the small 'V'. Numbering of 'Visit' and 'Nurse Present' events is the same as standard and assistance calls.

www.sensorium.co.uk

Intercall 700 User Guide.

Layout of the Intercall 752 Audio Call Point.

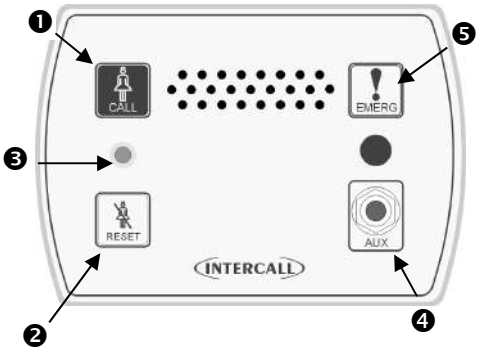

❶ Call button.
❷ Reset button.
❸ Re-assurance light.
❹ Jack socket.
❺ Emergency button.

Intercall 700 Call levels and what they mean.

Call – Standard patient call
Priority – Standard patient call which has remained unanswered for a period of time.
Assistance – Staff requiring assistance.
Emergency – Staff requiring urgent assistance.
Attack – Staff under threat & require urgent assistance.
Present – A member of staff is in the room.
Visit – A member of staff has accepted the call at the display and is on their way to the resident. If the intercom facility has been used, this will be logged on the printer.

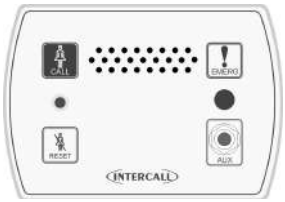

Making a standard call.

A standard call can be generated by any of the following:

- Pressing the **Call button** on the call point.
- Operation of the pear push lead (or other device) plugged into the **Jack socket**.
- Operation of a ceiling pull switch wired to the call point.
- Un-plugging the pear lead from the **Jack socket**.
- Operation of a radio or infra red pendant.

To confirm a standard call is active, the **Re-assurance light** will slowly flash red.

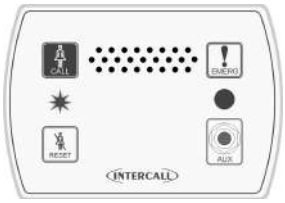

Priority Call*

A Standard call, which has remained active for a pre-set time period will automatically convert to **Priority Call** and the **Re-assurance light** will flash rapidly.

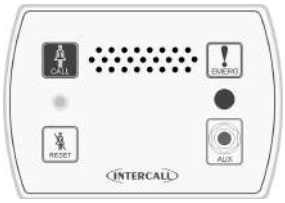

Staff Present Mode*.

When members of staff enter a room, they must press the **Reset button** on the call point. The call point is now in 'Staff Present' mode and the **Re-assurance light** will show a constant green. Other members of staff can now locate and communicate to this room. When they leave the room, they should press the **Reset button** again, this tells the system they are no longer in the room & the **Re-assurance light** is off.

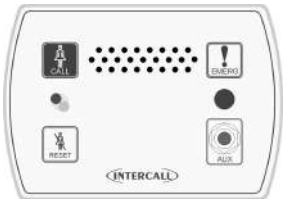

Staff Assistance Call*.

Staff assistance call can only be generated when the call point is in staff present mode and the **Re-assurance light** showing constant green. Pressing the **Call button** will generate an assistance call and the **Re-assurance light** will show red, then green once a second to confirm this action. To cancel the assistance call, press the **Reset Button** once. The call point is now in staff present mode with the **Re-assurance light** showing constant green. To cancel the staff present, press the **Reset Button** again until the **Re-assurance** light is off.

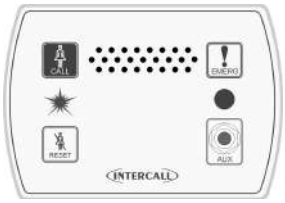

Staff Emergency/Crash Call.

Staff emergency call can be generated at any time by pressing the **Call Button** and the **Reset Button** simultaneously (or pressing the **Emergency Button**). To confirm this action the **Re-assurance light** will showing a rapid red flashing light. To cancel the emergency call, press the **Reset Button** once, the call point is now in staff present mode with the **Re-assurance light** showing constant green. To cancel the staff present mode, press the **Reset Button** again until the **Re-assurance** light is off.

Staff Attack Calls.

Staff attack calls can only be generated from an infra red trigger remote from the call point. Attack level calls are indicated by a very rapid red flash on the **Re-assurance light** and can only be reset with a 'reset' infra red trigger, or by a **Guardian** display when used with a combined **Intercall 700 / Guardian** system.

Paging other members of staff*.

Locating and communicating with other members of staff is simplicity with the Intercall 700 system. Simply press and hold the **Reset button** and you can page to all other Displays and Call points in **Staff Present** mode**.**

www.sensorium.co.uk

Layout of the Intercall 758 Audio Display Unit.

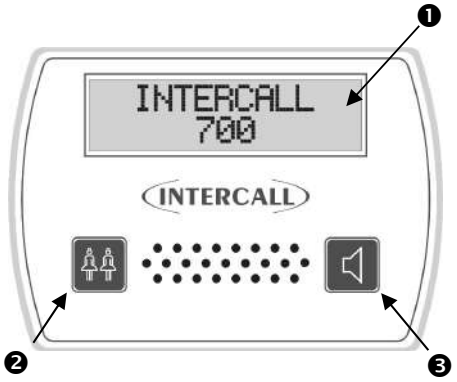

Intercall 700 Call levels and what they mean.

Call – Standard patient call
Priority – Standard patient call which has remained unanswered for a period of time.
Assistance – Staff requiring assistance.
Emergency – Staff requiring urgent assistance.
Attack – Staff under threat & require urgent assistance.
Present – A member of staff is in the room.
Visit – A member of staff has accepted the call at the display and is on their way to the resident.

❶ Two line LCD display. ❷ Show staff button. ❸ Accept call / Intercom button.

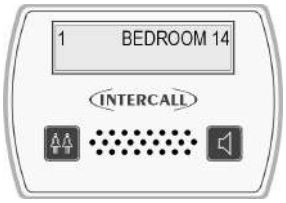

Standard Call.
A standard call will make a short uninterrupted tone, which repeats every 2 seconds. The number shown on the left identifies the queue position, where the lowest number is the oldest call. The right hand side of the display shows the call location. In the example, there is a call from "BEDROOM 24".

More than one Call.
When more that one call is active, the calls are scrolled on the display with their respective queue position. On the example shown to the left, we have two active calls "BEDROOM 24" is the oldest call and is in queue position 1. The call from "DINING ROOM" is more recent and is given queue position 2

Assistance Call*.
An assistance call will make two short tones which are repeated every 2 seconds. On the illustration to the left, there is a standard call from Bedroom 14 and an assistance call from the Dining Room.

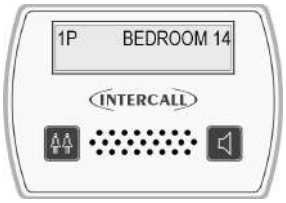

Priority Call*.
If a standard call remains un-answered, it automatically converts to a Priority Call. A Priority call is indicated with a letter 'P' after the call number. The intercom facility is <u>not</u> available on priority calls and the staff must attend the room to reset. When a priority call is active, all standard and assistance calls are held in memory but only displayed when the priority is reset.

Emergency Call.
An emergency call will make a fast series short tones, which are repeated continuously. On the illustration to the left, the word 'EMERGENCY' indicates the urgency of the call. The intercom facility is <u>not</u> available on emergency calls and the staff must attend the room to reset. When an 'attack' or 'emergency' call is active, all other calls are held in memory but only displayed when the emergency call is reset.

Attack Call.
An attack call will make a fast series short tones, which are repeated continuously. On the lower line of the LCD, the word 'ATTACK' is displayed similar to an emergency call. The intercom facility is <u>not</u> available on emergency calls and the call can only be reset with an infra red 'reset' trigger or using a Guardian display unit. When an ATTACK or EMERGENCY call is active, all other calls are held in memory but only displayed when the emergency call is reset.

Accepting a call. (Accepting a non-speech call)

To prevent several members of staff from responding to the same call, calls are 'accepted' at the display units. To accept a call, simply wait until the call you wish to accept is shown on the top line of the display, and press the **Accept Call** button. It is only possible to accept Standard and Assistance calls shown previously. If you are accepting a non-speech call point (such as a toilet or door point) then the call will be removed from the display and the sounder silenced for a pre-set period of time.

Accepting a call and speaking to a calling resident.

To accept and speak to a resident, the procedure is the same as 'accepting a call' above. Wait until the call you call you wish to speak to is shown on the top line of the display, press & release the **Accept Call** button. Once the word "speech open" appears, you will be able to hear the caller. Press and hold the **Accept Call** button when talking to the resident. Once the conversation is complete, press the **Show Staff** button once to close the intercom. *(The speech channel will close after 60 seconds automatically)*

Speech Busy.

To indicate to all other users that the speech channel is in use, 'Speech Busy' appears on the lower line of all other displays on the system and this is shown to the left. On all other displays, new calls will be shown using the top line of the LCD only and calls may be accepted (as non-speech calls) but the intercom facility will not activate.

Locating other members of staff.

To locate other members of staff, press and hold the **Show Staff** button on any display panel. On the left, a member of staff is present in Bedroom 14, indicated by the small 'p' and a member of staff is dealing with the call from the Lounge, indicated by the small 'v'.

Paging other members of staff.

To page all staff, simply press and hold the **Talk** button and speak to all other displays and call points in **staff present** mode. This is only possible when no calls are active on the system and is not possible when 'Speech Busy' is displayed on the lower line of the LCD.

User ID on the Intercall 700 System.

How the displays show who is calling*.

With the Intercall 700 system, it is possible to display the residents name, was well as their location when calling. We call this feature **'User ID'.** In order to register their name on the system, the resident must trigger the call point with an infra red trigger assigned to their name. All Intercall 700 Call Points are fitted with an infra red receiver which picks up these signals.

Standard Calls/Assistance Calls/Priority Calls.

The main difference when the **User ID** is enabled, is that both lines of the LCD are used for each call. On the top line, the location is displayed as previously and on the lower line, the **User ID** is displayed. Above left, is a standard call from 'Bedroom 14' activated by the trigger allocated to 'Mary Robinson'. To the left shows the factory default 'User No' rather than the residents name.

Secondary Descriptions*.

Four **User ID**'s are reserved as **System User ID**, these allow common descriptions to be allocated to other calling devices, connected to the call point. For example, a ceiling pull switch in an en-suit bathroom may be given the secondary description "EN-SUIT BATH" This will be combined with the room description when the switch is activated to produce "BEROOM 14 EN-SUIT BATH" as shown on the left.

More than one call active.

When more than one call is active, the calls are scrolled on the LCD display as normal but you can only see one call at any time. Each call is shown with the corresponding **Caller ID**. On the right we have a second call activated, with call number '2' and this time from 'Peter Jenkins' in the 'Dining Room'.

No User ID.

If a call point is not triggered from the infra red trigger, it is not possible to establish which resident activated the call point. When this occurs ,the lower line of the display reports '**No User ID'** as shown on the left.

***This feature can be disabled at the commissioning stage.**

Using the L744 RFID Access Control Unit.

The L744 is controlled with the use of a Card, which performs all functions when brought near the facia. The unit is simple to use and can be configured in a number of ways to suit the location. Please see the user information below.

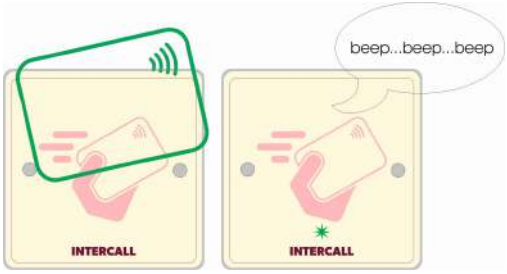

How to go out of the door. – *See Note 1.*

1. Present your card onto upper part of the unit.
2. The green light will flash & the beeper will sound.
3. The door will unlock *(if applicable)*
4. You have a limited time to open & close the door.
5. If you do not open the door, the unit will reset.
6. When the door closes, the unit will reset.
7. If the door is left open, the alarm will sound.

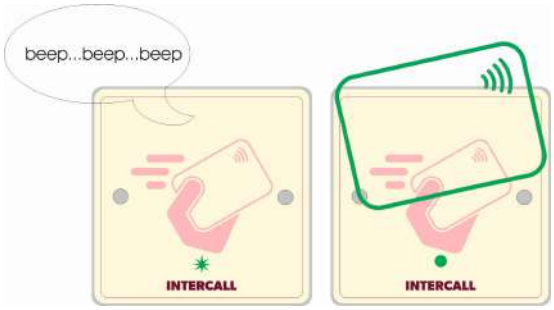

How to leave the door open. – *See Note 2.*

1. Present your card onto upper part of the unit.
2. The green light will flash & the beeper will sound.
3. The door will unlock *(if applicable)*
4. Open the door and present you card again.
5. The green light will be steady & the beeper stops.
6. You may leave the door open as required.
7. When the door closes, the unit resets.

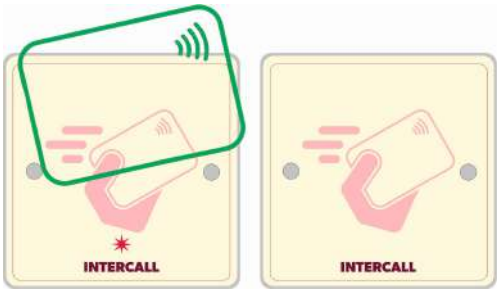

How to reset the alarm.

1. When the unit is alarming, the red light flashes.
2. Shut the door.
3. Present your card onto upper part of the unit.
4. The red light will stop flashing.
5. The system will stop alarming.

Simple on/off mode. *See Note 3.*

1. Present your card.
2. The Green light will light continuously.
3. The door is now isolated and may be opened and closed as required.
4. To re-arm, close the door & present your card and the green light will extinguish.

Note 1- Operation described; Mode 1 with Double Swipe mode Disabled.
Note 2- Operation described; Mode 1 with Double Swipe Enabled.
Note 3 – Operation described; Mode 2.

www.sensorium.co.uk

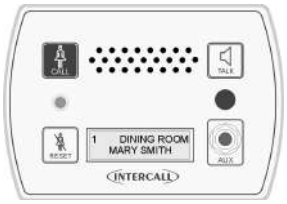

Call/Display Unit.
The L762 Call/Display Unit combines the features of the L752 Call Point and L758 LCD Display unit. Calls are generated in the same way as with the Audio Call Point discussed previously, with the exception that there is no separate emergency button. *(Emergency calls are generated by pressing both call and reset buttons simultaneously)* The LCD display is enabled when the call point is in 'Staff Present Mode' and operates in a similar way to the LCD Display Unit also described previously.

Normally, when no call is active on the system, the LCD will show the programmed default text and the factory default is 'Intercall 700'. If an Emergency or Attack call is active, the LCD display will show this call, but the sounder will not operate unless the call point is in 'Staff Present' mode.

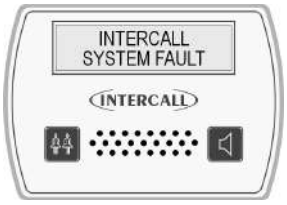

How the displays show faults on the system.
The system is continuously monitored and should a system fault occur, the lower line of the LCD will read System Fault and this is accompanied by an audible alarm, which informs of problems without becoming intrusive.

Overdoor Lights.

Overdoor lights are an optional item generally located outside the room to relay the status of the call point within the room. The unit is fitted with twin red/green LED's which mimic the re-assurance LED on the call points.

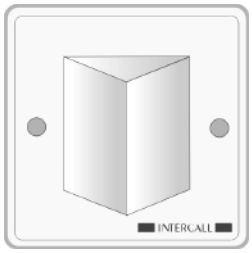

Overdoor Light Call Patterns.
Call – Steady Flashing Red
Priority – Flashing Red
Assistance – Alternating Red and Green
Emergency – Fast Red Flashing.
Attack – Rapid Red Flashing.
Present – Continuous Green Indication.
Call Accepted / Spoken – Steady Green Flashing

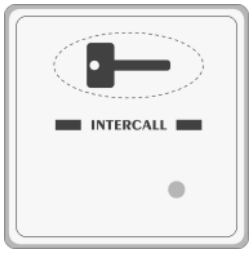

Door Monitoring and Access Control Points.
Generally used to monitor fire doors and main entrances for unauthorised entry or exit. Token allows door to be opened by authorised personnel without sounding the alarm and isolated to allow the door to be left open if required. *See page28*

Slave Call Points.
Similar to standard call points, these units are generally used in rooms with several beds. The unit can only generate a standard call from the CALL button or jack socket. There is no facility to reset and this must be done on the standard call point within the room.

Slave Reset/Present Points.
Similar to standard call points, these units are located by the door of the room or ward to allow the staff to generate staff present indication and to reset the call away from the call point. There is no call facility on this unit. *See page 47*

Remote Infra Red Trigger.
The **TIR4** Infra Red Trigger may be used to make a call away from the call point without trailing wires. All Intercall 700 call points are fitted with an infra red receiver as standard, which will receive signals from the trigger within a typical 5 x 5 metre room.

Pear Leads.
Pear leads are used to trigger the any Intercall call point. They are available in 2metre and 4metre lengths terminated with a 90 degree jack plug. There is a clip which may be used to secure the lead to bedding or residents clothing. The unit features a wipe clean, soft touch switch which is easy activated with light finger pressure.

www.sensorium.co.uk

Installation Guide.

Both the Intercall 600 and Intercall 700 systems are fully addressable and network devices only require a connection to the common "**Network**" to operate. The Intercall 600 system uses a two core network for power and signals, while the Intercall 700 audio system uses a four core network, one pair for power and signal and the other pair for audio. All units are fitted with a positive **(+)** and negative **(-)** terminal and Intercall 700 audio devices have additional **(a)** and **(b)** terminals for the audio pair.

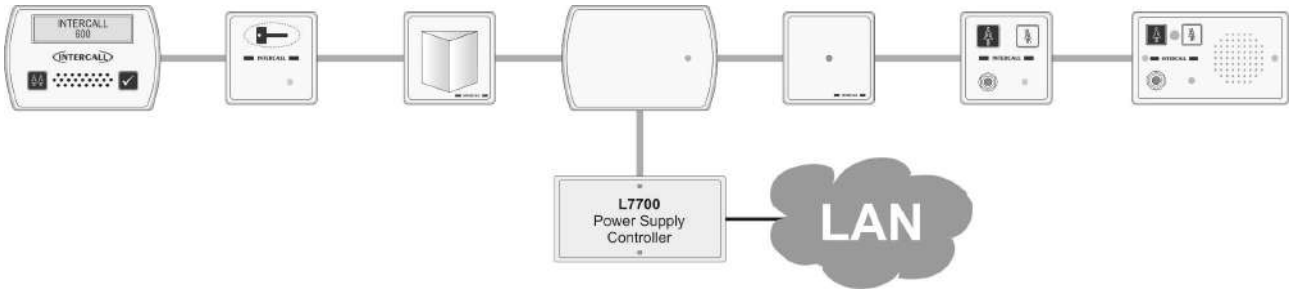

*'Network Devices' (Call Points, LCD Displays, Overdoor Lights etc) connect to the **'Network'** which proves all power.*
The controller features embedded TCP/IP web server and may be configured using a web browser remotely.

As can be seen on page 3, several Intercall 600 and Intercall 700 devices may be combined to form a system. In addition, it is not necessary to have the audio feature on an entire Intercall 700 system, for example L722 Non Audio Call Points may be used within the bedrooms while Audio Call Points and Audio Displays are used elsewhere on the system. To reduce audio interference and costs, we recommend that the network audio pair is only run to the parts of the system where the audio feature is required.

As with all systems of this nature, the integrity of the network cabling is paramount to the performance and reliability of the system. Excessive cable volt drop must be avoided and we only recommend the use of a heavier "*Spine*" cable from the Power Supply to the FJB Fused Junction Units, then lighter "*Spur*" cables from the Junction units, taking in the network devices. The network output from the power supply runs at 13.8V and the network devices will operate down to 9~10v permitting a 4.8v maximum volt drop along the network cables to the furthest device.

We only recommend the use of FJB units, which have fused outputs for the wiring of individual sections of the system. Generally, one FJB would be located on each floor on wing of the establishment, with the Spine Cable connecting them back to the Power Supply Units.

Understanding "Current Units".

The amount of volt drop experienced in each length of cable depends on the size of the cable and the total amount of current drawn by the network devices attached to it. To simplify the cable run calculations, we have given each network device a 'Current Unit' value, which reflects the amount of current drawn by that unit.

Cables.

We do not recommend the use of solid core cables – always use the flex (flexible) stranded alternative as listed below or equivalent.

Network Cable for Intercall 600 and Intercall 700 Non speech Installations.

Use a Two-Core **1.5mm² [30/0.25 Flex]** for the network 'Spine' from the power supply to the FJB's and Two-Core **0.5mm² [16/0.2 Flex]** or 4/6 Core Security Alarm Cable (minimum **0.22mm² [7/0.2])** for the network spur outputs from the FJB.

Network Cables for Intercall 700 speech Installations.

Use a Two-Core **1.5mm² [30/0.25 Flex]** and **Belden 8760** for the network 'Spine' from the power supply to the FJB's and **Belden 8723** for the network spur outputs from the FJB.

***Belden 8760** is a single pair cable, connect the **(A)** and **(B)** terminalwith the screen drain wire connected to **(-)** and use the Two-Core **1.5mm² non screened** for the **(+)** and **(-)** connections. **Belden 8723** is a two pair (0.3mm²) individual screened cable. Use the Red/Black pair for the **(+)** & **(–)** and the Green/White pair for the **(A)** & **(B)**. Connect the screen drain wire to the Network **(–)** terminal at every junction.*

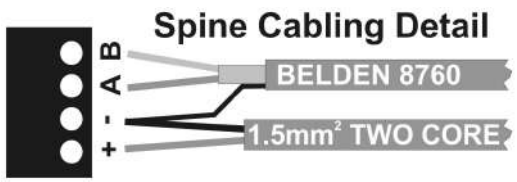

On the left we are showing the spine cable for a typical Intercall 700 speech installation. For non-speech applications ignore the Belden cable.

www.sensorium.co.uk

Planning an Installation.

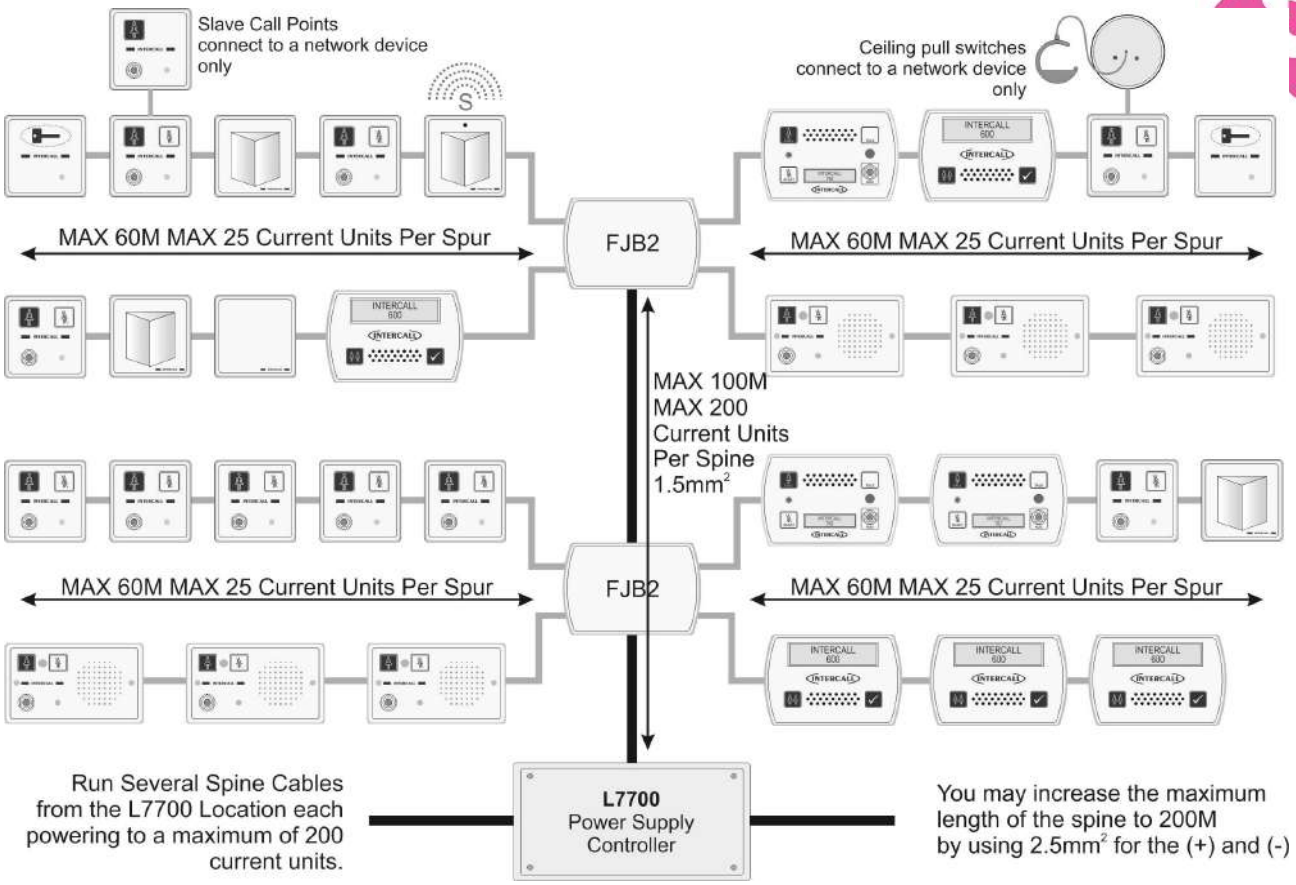

- Locate the **L7700 IP Power Supply** (*or L717 Power Supply*) in a central location of the building and run several **Spine** cable(s) from this point to FJB locations.

- The maximum length of each **Spine is 100M** to the furthest FJB. Each spine can support a maximum of **200 current units** which is equal to two fully loaded FJB units.

- Run a maximum of 4 cable spurs from the FJB's. The maximum length of each **spur is 60M** to the furthest device. Each spur can support a maximum of **25 current units**.

- The L7700 can support a maximum of 500 current units, the L717 can support a maximum of 100 current units.

- **NEVER** run Network cables alongside mains cables, fluorescent lights, electrical switch-gear, lift machinery and motors and high voltage cables etc.

The following table shows the number of **'Current Units'** for each network device

Device	Description	No of Units
L622	Standard Call Point	**1**
L622M	Magnetic Call Point	**1**
L744	RFID Access Point	**1**
L634	I/O Module	**1**
CS1	Ceiling Pull Switch	**0.25**
SCP	Slave Call Point	**0.25**
L628	LCD Display	**4**
L746	Overdoor Light	**1**
L746S	Light + Sounder	**3**
L714	Remote Sounder	**4**
L747	System Interface	**4**
RB1	Relay Board	**2**
PIR1	Passive Infra Red Unit	**1**
L722	Infra Red Call Point	**1.5**
L752	Audio Call Point	**2.5**
L758	Audio Displays Unit	**4**
L762	Audio Call/Disp Unit	**2.5**

- **NEVER** use two cores within a four core cable where the other cores are used by another Intercall system or other system such as Fire Alarm, Telephone etc.

- **ENSURE** there is no connection between any of the network cables; (+) (-) (A) (B) and **Mains Electrical Earth** as the system must be entirely 'floating'. Check with a meter before switching on the system.

- **NEVER** perform a high voltage insulation test with equipment connected to the cabling as you will destroy the network devices.

- ***IMPORTANT*** *The cable length limits assumes that FJBs / NetworkDevices are located at regular intervals along the length of the cable & that a maximum of 20% of the call points are calling at any one time. This limit can be increased by reducing the length of spur or reducing the number of current units attached to the spur.*

www.sensorium.co.uk

FJB's in use.

Locate the Power Supply in a central location in the building and run several spine cables from this point to the FJB locations. Using 1.5mm² Each spine cable can be no longer than 100M and can support a maximum of 200 current units. The L7700 can support a maximum of 500 current units. The L717 can support a maximum of 100 current units.

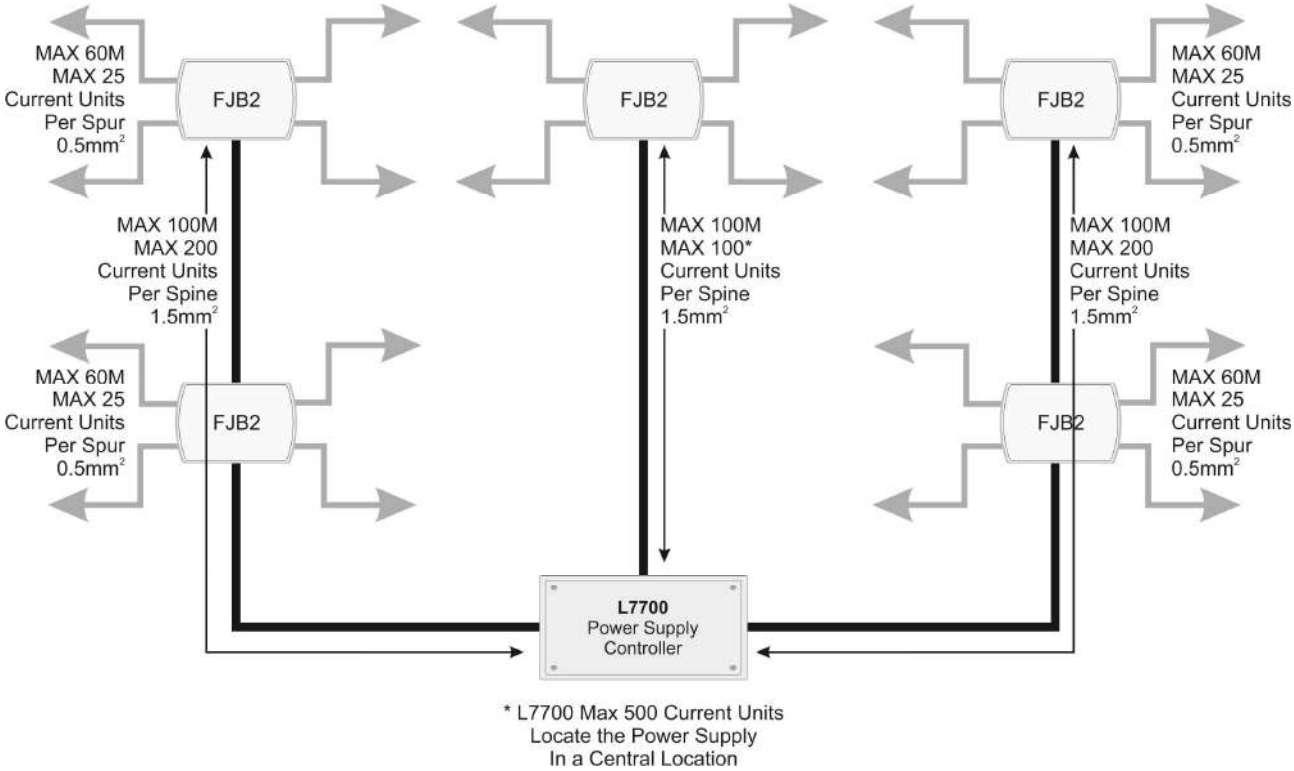

Cable Detail.

Showing the different cables used for Speech and Non Speech Systems. We do not recommend the use of solid core cables – always use the flex (flexible) stranded alternative as listed below or equivalent.

<u>Network Cable for Intercall 600 and Intercall 700 Non speech Installations.</u>

Use a Two-Core 1.5mm² [30/0.25 Flex] for the network 'Spine' from the power supply to the FJB's and 0.5mm² [16/0.2 Flex] or Security Alarm Cable minimum 0.22mm² [7/0.2] for the network spur outputs from the FJB.

<u>Network Cables for Intercall 700 speech Installations.</u>

Use a Two-Core 1.5mm² [30/0.25 Flex] and Belden 8760 for the network 'Spine' from the power supply to the FJB's and Belden 8723 for the network spur outputs from the FJB.

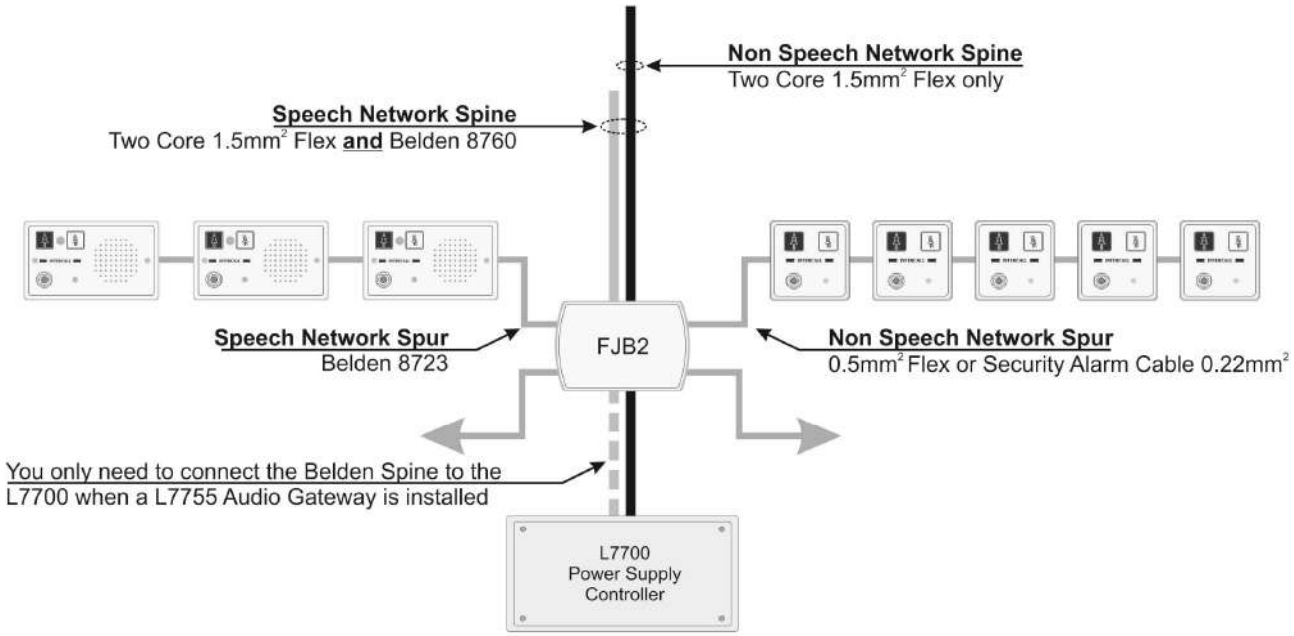

www.sensorium.co.uk

Replacing an existing System – using the existing wiring.

The **INTERCALL** system is ideally suited for the replacement of existing hard wired nursecall system, using the existing cabling but please note the following considerations.

- Study and make notes about the existing system.

The most common problems occur when the old system is removed before the wiring is understood. We need to identify two cores common to all parts of the system which are usually the supply lines. Look for legends on the printed circuit boards (**0v, GND, +12 +** etc)

- Remove all parts of the old system from the wiring.

Another common problem is where parts of the old system are still connected, a remote sounder, bell or buzzer in another part of the system.

- Make sure the old power supply is switched off and disconnected from the system.

Do not attempt to keep the old system running on the same cables as you are installing the new system, you are most likely to damage both systems and delay completion.

- Beware of Multi-core cables.

Multi-core cable is often used on older systems where every call point requires an individual connection back to the display panel. This cable must be 80 pair cable (160 cores) is quite common. If you are using multicore cable you should only use two cores within the multi-core length. If this cable is too small to connect the amount of current units required, then this cable should be replaced with a cable of the SPINE specification.

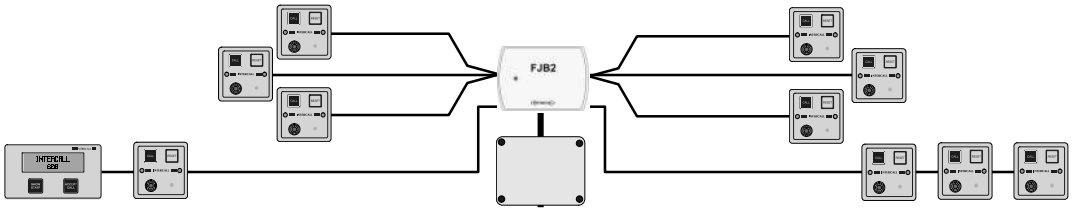

When using the existing cabling, normally there is one cable back from each call point. In this instance, we would connect several call points cables together *(to a maximum of 25 current units)* and connect them to one single output of the FJB. Once the existing cabling is connected, additional spurs can be run from the FJB for new extensions as shown above.

Typical New Installation.

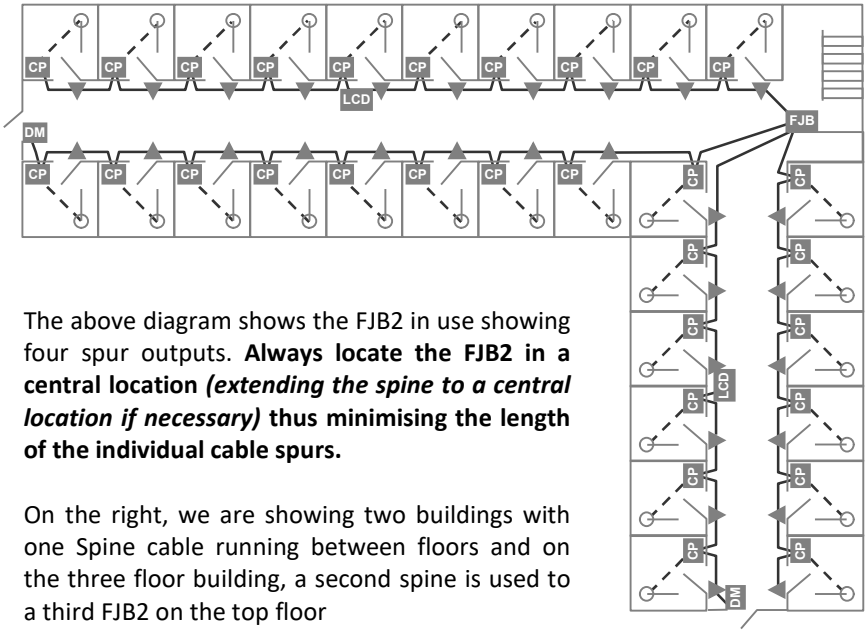

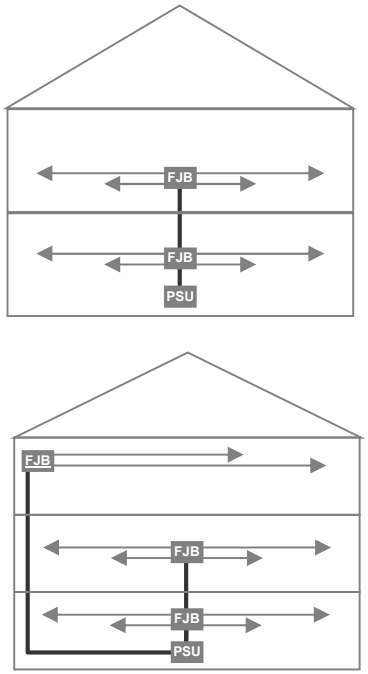

The above diagram shows the FJB2 in use showing four spur outputs. **Always locate the FJB2 in a central location *(extending the spine to a central location if necessary)* thus minimising the length of the individual cable spurs.**

On the right, we are showing two buildings with one Spine cable running between floors and on the three floor building, a second spine is used to a third FJB2 on the top floor

www.sensorium.co.uk

First Fix.

Please read the advice given on page 12 with regard to power supply position and required cabling techniques.

INTERCALL 600 and 700 Mains connection requirements	
L717/L7700 Power Supply Controller	Non Switched Fused Spur unit with 5amp fuse fitted
L617 600 Series Master Power Supply	Non Switched Fused Spur unit with 5amp fuse fitted
L717 700 Series Master Power Supply	Non Switched Fused Spur unit with 5amp fuse fitted
L737 *600/700 Series Booster Power Supply*	*Non Switched Fused Spur unit with 5amp fuse fitted*
L748 600/700 Corridor LED Display	Non Switched Fused Spur unit with 5amp fuse fitted
RFTX Scope pager transmitter	Non Switched Fused Spur unit with 5amp fuse fitted
DPU414 Thermal Printer	Standard 13amp socket

Due to the wide variety of fixing possibilities, the Intercall system is not supplied with backboxes. We recommend the following available from your local electrical wholesaler or supplier.

SURFACE MOUNTING: INTERCALL BB1 BACKBOX **FLUSH MOUNTING:** 35mm Depth DOUBLE METAL BOXES	**SURFACE MOUNTING:** CRABTREE 9047 or CONTACTUM 1042 **FLUSH MOUNTING:** 25mm Depth SINGLE METAL BOXES*
L628 600 SERIES DISPLAY UNIT	**L622 / L722** NON AUDIO CALL POINTS
L752 700 SERIES AUDIO CALL POINT	**L746** 600/700 SERIES OVERDOOR LIGHTS
L758 700 SERIES AUDIO LCD DISPLAY UNIT	**L714** 600/700 SERIES REMOTE SOUNDER
L762 700 SERIES AUDIO CALL/DISPLAY UNIT	**RX1** RADIO RECEIVER
FJB2 600 / 700 SERIES PROTECTED JUNCTION BOARD	**RB1** RELAY BOARD
L747(MK2) 600 / 700 SERIES UNIVERSAL INTERFACE	**PIR1** PASSIVE INFRA RED DETECTOR

VERY IMPORTANT
DO NOT USE METAL BACKBOXES BOXES WITH FOUR MOUNTING LUGS AS THEY RESTRICT ACCESS AND CAN DAMAGE SOME UNITS.

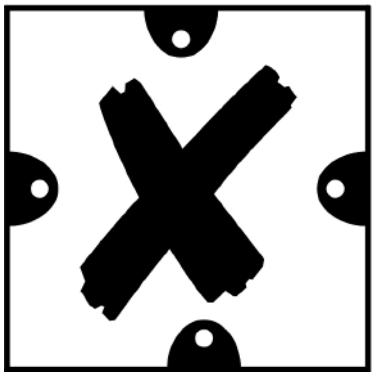

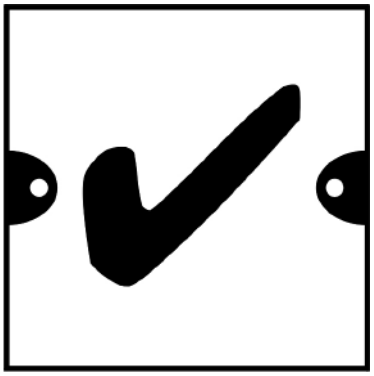

INTERCALL 600 and 700 Equipment which is not mounted in backboxes	
L717 Power Supply	Wall Mounted W240mm x H180mm x D100mm (Allow 200mm access on all sides)
L7700 IP Power Supply	Wall Mounted W380mm x H270mm x D120mm (Allow 200mm access on all sides)
RFTX Scope Transmitter Kit	Wall Mounted W190 H330 D100 (Not including aerial) (Allow 200mm Access around all sides)
CS1 Ceiling Pull Switch	Surface mounting only - Requires no backbox
DPU414 Thermal Printer	Desk Mounted – Requires no fixed installation

www.sensorium.co.uk

First Fix Recommendations.

- Always mount call points above the final bed height to avoid damage to the call points if the beds are moved.

- **IMPORTANT** Ensure Infra Red call points are located in a position suitable for infra red reception and are not obscured by curtains, doors or furniture, or located in front of TV screens. Infra Red Receiver only units are best located on the ceiling or high on the wall. If the infra red performance is crucial to your system, always perform a site test before installation to establish the optimum location and quantity of infra red receiver units.

- Locating Infra Red Call Points in direct sunlight may degrade their performance.

- **HIGH FREQUENCY FLUORESCENT LIGHT FITTINGS** must operate above 50KHz at all times to ensure they do not interfere with infra red systems. Most lighting manufacturers are aware of this issue and can recommend suitable light fittings.

- Locate LCD displays at typically 1600mm from the ground for ease of use.

- **DO NOT** locate any device directly above a radiator or other heat source as this may affect the front panel label and operation of the unit and LCD display.

- Power Supplies must be located in accessible positions for programming and maintenance access.

- Radio RFTX transmitters must not be located within 10 metres of any Intercall power supply.

- Do not locate audio call points and Audio display units 'back to back' on stud or partition walls as this will cause audio feedback as there is insufficient audio insulation between the two units to prevent this from occurring.

- When first fix is completed ensure INTERCALL parts are stored safely and the back-boxes and any bare wires are protected from paint, nails and plaster!.

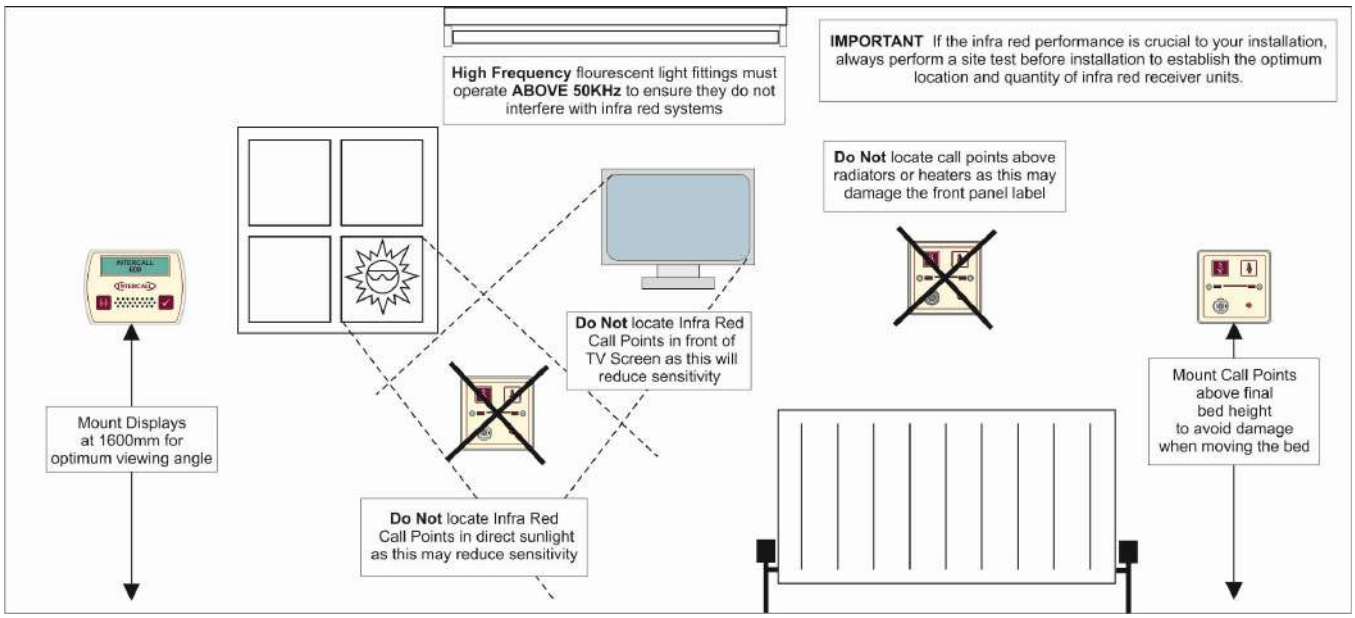

Second Fix.

These pages cover the connecting and basic testing of all parts of the system. It is intended as a brief overview for connecting and testing for the first time and does not go into great detail on each individual unit. Detailed information on each individual unit is covered from page 20 and the user guide from page 4.

Connecting the L717/L7700 Power Supply.

- Connect the mains supply to the Power Supply and switch on.
- Allow the Power Supply to start up and perform a system start / self test.
- If the supply is unstable, due to flat battery, a short on the output wiring or fluctuating mains supply, the unit will not start-up.
- After the reset, the following light should be visible: The Yellow '**Mains OK**' LED, the Green '**DC OK**' LED and the red '**Micro**' or Blue **'Net'** LED will be pulsing.
- If the mains supply of off, the Yellow LED will not light.
- If the Green LED is not the DC voltage rail is outside limits and the unit should be powered down.
- The Battery Fault LED will light if the Battery is faulty or not connected.
- Do not switch the system on by connecting the battery as the surge may blow the fuse.
- Switch off and connect one 'leg' of the installation so that we can test the operation of the units.
- Once the units are connected, test the system as per the instructions in page 19 Basic System Test.

ALWAYS CHECK THE POLARITY OF THE BATTERY AND ALL UNITS BEFORE SWITCHING ON!

All network devices are fitted with reverse polarity protection and the PSU network ouput fuse will blow or the power supply will shut down if any unit is connected incorrectly.

Basic System Test – Power Up.

Before the system is tested, the call point(s) address switches will need to be set. If you are testing a single call point set up we recommend setting the unit to ADDRESS 1. (Switch 1 OFF, All others ON) There is a complete list of factory text settings in this guide. If you will be using Overdoor Lights, set the switches on the Overdoor Light to the same setting as the call point.

- Connect the Master Power Supply and test as per the instructions as detailed above and switch the mains supply on.

- When power is applied to the call points, the re-assurance LED will flash green three times to indicate the unit has reset and is running correctly.

- When power is applied to the display units, the display will show the software version (e.g. **SW2572_100**) followed by the default standing text. The factory default standing text is **INTERCALL 600** or **INTERCALL 700** depending on the system.

- When power is applied to the overdoor lights they illuminate the three green flash start up pattern. Set the address switches in the same way as the Call Point addresses. (See page 32 for more information)

If you are not sure that the above power up sequence has operated correctly, please see page 75 Fault Finding Guide.

Basic System Test - Call Test. (Intercall 600/700)

Once the system has powered up correctly, the following test can be carried out:
*All items marked * are optional and may not be fitted on your system.*

- Press the **CALL** area on a call point.
- The red re-assurance LED will flash slowly on the call point.
- After a short pause, the display will sound and the LCD display will be showing **1 BEDROOM 1.**
- * The overdoor light assigned to BEDROOM 1 will show the standard call signal. (Slow Red Flash)
- Press the **RESET** area on the call point to reset.

www.sensorium.co.uk

Basic System Test - Accept Call. (Intercall 600/700)

The following tests apply to standard Intercall 600 and Non Audio Intercall 700 installations.
With the display sounding and showing the call, press the **CALL ACCEPT** button. The following will happen.

- The call point re-assurance LED will stop flashing red and flash green.
- The LCD will briefly display **- ACCEPTED -** on the lower line and the alarm will stop sounding.
- The call will be removed from the display and the LCD display will show **INTERCALL 600/700**.
- * The overdoor light will show slow flashing green.
- If you press and hold the **SHOW STAFF** button on the display after a pause you will see **1v BEDROOM 1**.
- Release the **SHOW STAFF** button
- After a delay, the call will return as per 1.
- Press the **RESET** area on the call point to reset.

The Accept Call, Nurse Present functions and the delay period can be disabled or configured for different applications and may not be enabled on your system. Please see page 55 for more information.

Basic System Test - Accept Call & Open Intercom. (Intercall 700 only)

With the display sounding and showing the call, press the CALL ACCEPT button. The following will happen.

- The call point re-assurance LED will stop flashing red and flash green.
- The LCD will briefly display **- ACCEPTED -** on the lower line and the alarm will stop sounding.
- The call will remain on the top line and **SPEECH OPEN** will be displayed on the lower line.
- The intercom channel will open and it is possible to listen to the call point.
- Press and hold the **ACCEPT** button on the display to speak to the call point.
- To cancel the intercom channel, press the **SHOW STAFF** button.
- The call will be removed from the display and the LCD display will show **INTERCALL 700.**
- * The overdoor light will show slow flashing green.
- If you press and hold the **SHOW STAFF** button on the display after a pause you will see **1v BEDROOM 1.**
- Release the **SHOW STAFF** button
- After a delay, the call will return as per 1.
- Press the **RESET** area on the call point to reset.

Basic System Test - Nurse Present & Location. (Intercall 600/700)

With no call active and the display showing the default text (**INTERCALL 600 or 700**), test the following:

- Press the **RESET** area on the call point and the green LED will light continuously.
- If you press and hold the **SHOW STAFF** button on the display after a pause you will see **1p BEDROOM 1.**
- * The overdoor light will show continuous green indication.
- Press the **RESET** area on the call point to reset.

Basic System Test – Staff Page. (Intercall 700 only)

With no call active and the display showing the standing text (**INTERCALL 700**) the following tests may be carried out:

- Press and hold the **ACCEPT** button on the display.
- Your speech will be amplified and output from every display on the system.
- Your speech will also be output from all call points in nurse present mode. *See page 6*
- You can also page from the call point as follows:
- Press the **RESET** area on a call point so the green LED lights continuously.
- Press and hold the **RESET/PAGE** button on the call point.
- Your speech will be amplified and output from every display on the system.
- Your speech will also be output from all call points in nurse present mode. *See page 6*
- Press the **RESET** area on the call point so the green LED is extinguished.

The above are simple system tests, for more detailed information, please refer to page 4 User Guide.

L717 Budget Power Supply Unit.

The L717 may be used with smaller Intercall 700 & Intercall 600 systems and the unit provides power and data signals for the network devices and stores the text programming information & when this is customised, it will need to be downloaded to any new display, call logger or pager interface installed on the system at a later date. The L717 is programmed using the LIMK Limkit programming kit and software which plugs into the connector on the right shown below. The system functions are configured using the DIP Switches on the L717.

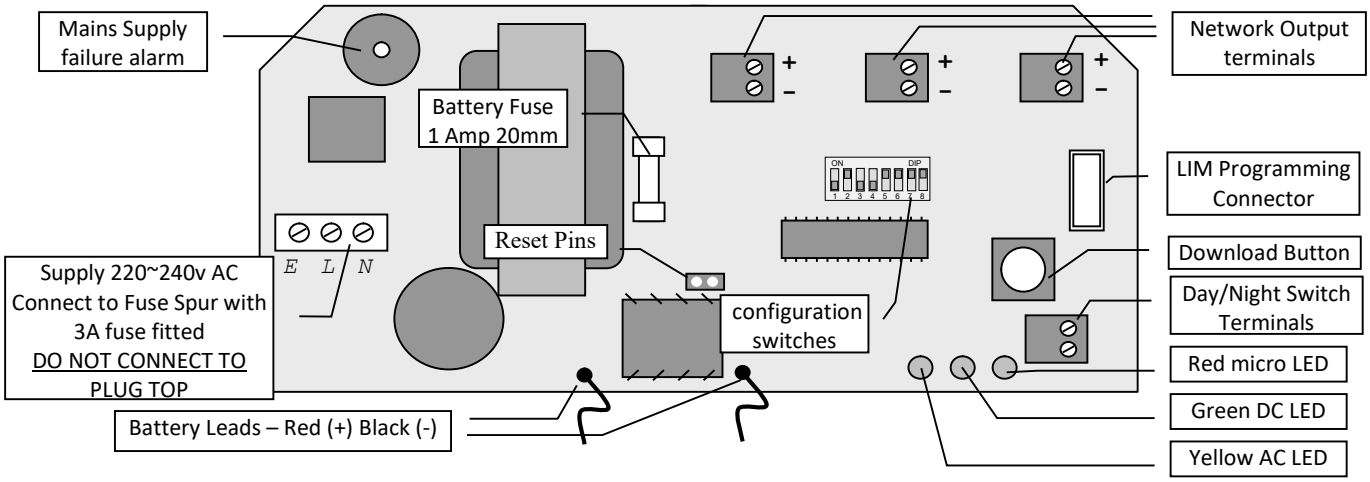

IMPORTANT NOTE:
The L617 600 Series Power Supply is still available for maintaining earlier Intercall 600 systems as you cannot replace the L617 with a L717 without ensuring all network devices are 600/700 compatible. Generally speaking, Intercall 600 devices manufactured after 2003/2004 are compatible with the L717.

Mains Terminals:	220-240VAC @ 20W *(Max)*
Required Battery:	12v, 1.9/2.1/2.4 Ah sealed lead acid battery. **OBSERVE POLARITY!**
Output Terminals (+-):	Three parallel pairs provided for convenience, connect to network devices.
LIM Connector:	Connects to LIM for system text programming. *(See page45)*
Configuration Switches:	**See page 74 for a complete list of DIL switch settings.**
Day/Night Terminals:	By connecting a switch between these two terminals you can switch the between the two volume levels set-up on the displays. *(See Pages 28)*
Download Button:	Press & hold for 10 seconds, then release, to download text to LCD displays. **THE BATTERY MUST BE CONNECTED WHEN DOWNLOADING**
Reset Pins:	If shorted, resets the power supply and cancels all calls active on the system.
Mains Failure Alarm:	Beeps every 3 seconds when no mains supply is present.
Red Led:	Flashes, indicating unit is operating correctly.
Yellow Led:	Indicates AC is present and transformer is operating.
Green Led:	Indicates 12volt DC supply is present and fuse is intact
Onboard Fuse:	1Amp 20mm protection for power supply & battery.
Installation:	Self Contained Surface Mounted Case. (See Below)
Size & Weights:	225 x 180 x 90 mm, 1400g

www.sensorium.co.uk

L7700 IP Power Supply Controller.

The L7700 has the capacity to power an entire Intercall system with provision in the enclosure to accommodate a 12Volt 12AH battery for system backup requirements. The unit features an integrated **embedded web server** used to configure the system configuration, datalog access and remote monitoring. The Ethernet port may be used to connect IP controllers together, provide an interface to other Intercall IP devices and for connection to third party products such as IP/DECT phones & message paging etc. In addition, the unit features; onboard calendar clock and disk drive which records all system activity and configuration settings. Day/Night alarm settings may be automatically switched by the on-board clock or by manual switch. The unit features programmable volt free contact inputs and a volt free contact output together with an RS232 output which can be configured for many baud rate and data formats. The integral float charger supports a single 12Volt 12AH battery and the AC, DC, Battery and Earth continuity are monitored continuously. **IMPORTANT The L7700 is Not compatible with the L737 Booster Power Supply.**

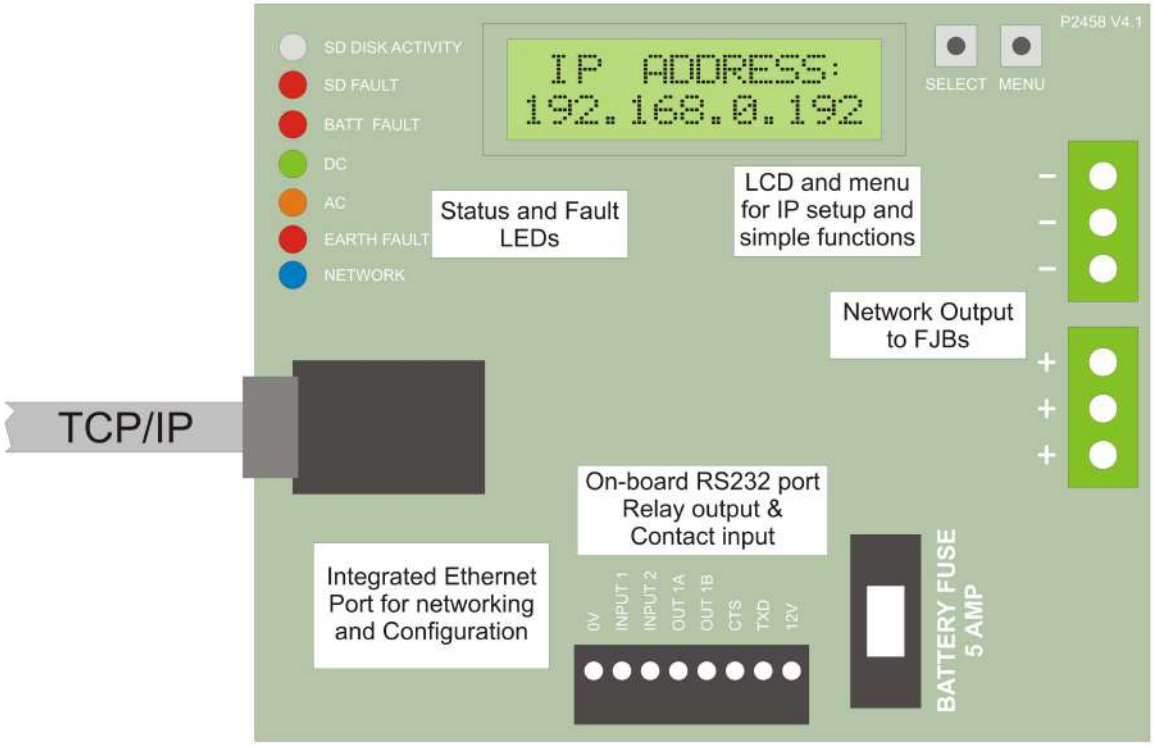

Above showing the printed circuit board detail and below showing the board in the case.

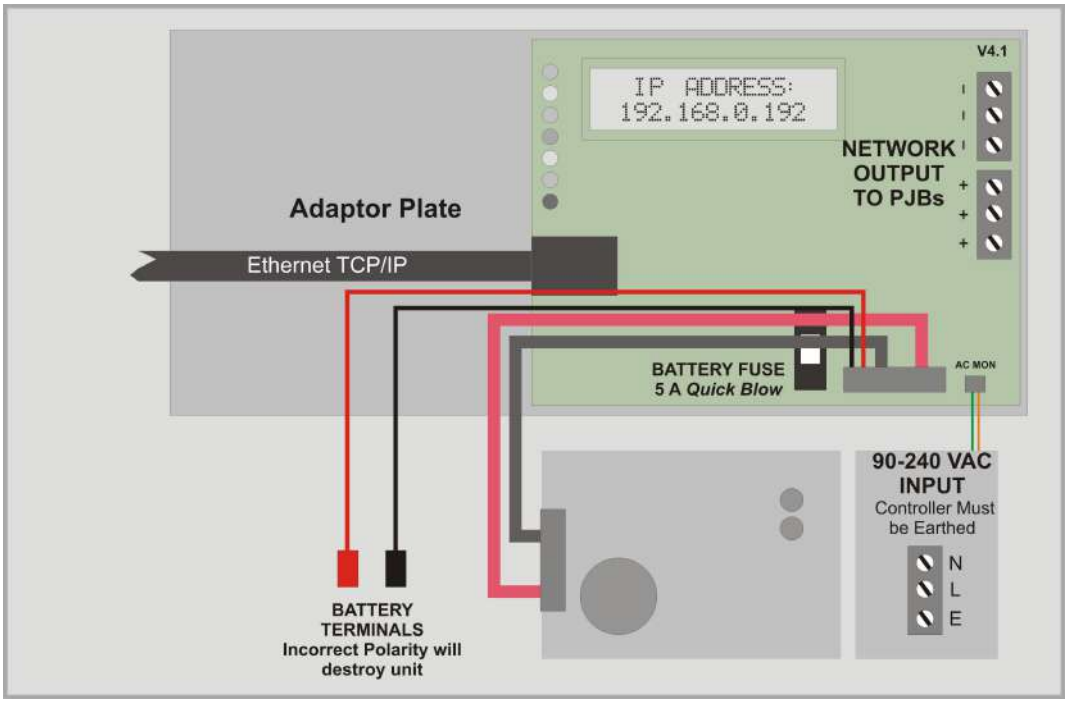

www.sensorium.co.uk

L7700 IP Power Supply Controller LCD Screen.

The on-board LCD screen, together with the Menu and OK buttons provides access to essential Local Area Network and Power Supply status, together with control over the basic settings of the IP controller. In quiescent condition, the LCD Displays INTERCALL IP and the date and time, to scroll through the menu screens, press the Menu button to activate one of the settings press the Select/OK button.

Menu	Settings	Description
INTERCALL IP16 17/3 10:32:12	In quiescent condition, the LCD Displays INTERCALL IP and the date and time. Press the Menu button to move onto the next setting.	
IP ADDRESS: 192.168.0.192	Displays the current IP address for the IP Controller. *(The factory default fixed IP Address is **192.168.0.192** and DHCP is disabled)*	
SERIAL NUMBER: IC001A7A0000123	Displays the unique Serial Number / MAC Address	
FREE DISK SPACE: 100%	Displays the percentage of available Space on the Data Log,	
DC RAIL: 13.8V	Displays the voltage of incoming DC Supply Rail to the IP16 Printed Circuit Board	
BATTERY CHARGE: DETECTED	Displays the status of the sealed lead acid battery charger. A non-charging or not connected battery will show as NOT DETECTED and a fault will be raised.	
UNIT TEMPERATURE: 25.6 Deg	Displays the ambient temperature of the IP16 controller circuit board.	
FIRMWARE VERSION: 1.0.0.2	Displays the current installed software version of the IP16 controller.	
DEVICE RESET: "OK" TO CONFIRM	Press OK button to reset all network devices connected to this controller.	
FULL RESET: "OK" TO CONFIRM	Press OK button to reset IP16 controller and all network devices connected to this controller.	

L7700 Revert to Factory Defaults.

The IP16 can be reverted to factory defaults switching the unit on while holding down the **Menu** button, the following screens will appear on the LCD screen. If a new disk is inserted, the IP16 will automatically go through this process, in which case you must press OK to the first two screens but you may retain the current LAN settings.

Menu	Settings	Description
DISK FORMAT OK = Continue	Press OK to format the SD card and clear *all* user defined data. This screen will automatically appear if a new SD card is fitted.	
CLEAR DATALOG OK=continue MENU=skip	Clears all entries from the datalog, press MENU button to Skip or OK button to continue. If this is a new SD card you must press OK to continue.	
LAN DEFAULTS OK=continue MENU=skip	The LAN settings are held within the IP16 circuit board and not in the SD card, so if the card is changed, the network settings can be retained. Press OK to load default settings.	

www.sensorium.co.uk

L7700 IP Power Supply Controller Connections.

You can make a simply one–to– one connection with your laptop computer using a Ethernet cross-over cable. This will allow access to the on-board web pages for system configuration. No special software is required; access is via a standard web browser such as Internet Explorer or Firefox. To make a one-to-one connection with your laptop, you may need to alter the IP settings on your laptop and set a manual IP Address. More information is contained within the L7700 manual and there is much information on the internet on how to set a manual IP address on your laptop.

To show the controllers IP Address
Press the Menu button ONCE

MAIN SUPPLY INPUT: **90 – 264VAC 47-440HZ TYPICAL LOAD 0.72A/230VAC 1.2A/115VAC**
Remove protective cover to gain access to these terminals.

OUTPUT: **13.8VDC 5.1A Including Battery Charger**

REQUIRED BATTERY: **12Volt 12Amp Hour** Sealed Lead Acid. **OBSERVE POLARITY!**
BATTERY CHARGER: Float charger designed to *maintain* a **12Volt 12Amp** battery, *see previous page*.

OUTPUT TERMINALS: Three terminals provided, connect to network spines (min 1.5mm^2 cable)

ETHERNET: **IEEE 802.3 C**ompatible 10Base-T interface using copper RJ45 connector.

LCD: Two line LCD with menu for essential status & configuration.

MENU & SELECT/OK: Buttons for navigating the LCD Menus.

INPUT TERMINALS:

INPUT 1: Programmable Input No 1 active when connected to 0V.
INPUT 2: Programmable Input No 2 active when connected to 0V.

RELAY OUTPUT TERMINALS:

OUT 1A & 1B: Programmable Volt Free Normally Open Output Max 24V DC 500mA

SERIAL RS232 OUTPUT TERMINALS:

TXD: RS232 Output Data which can be many baud rates & data streams.
CTS: RS232 Flow Control Input which can be disabled and/or inverted.

STATUS LEDs:

NET: Blue pulsing indicating the Intercall network processor is running.
EARTH* Indicates too low resistance between the network & protective earth.
AC: Yellow to indicate Mains Supply detected.
DC: Green to indicate DC supply is operating within limits.
BATT* Battery backup fault, battery is not charging.
SD* Fault reported by on-board disk.
DISK: Indicates activity read/write to the on-board SD Disk.
*(*Red LEDs indicate Fault Conditions)*

Onboard Fuse: 5Amp 20mm Quick Blow protection for Battery, Charger is current limited.

Installation: Self Contained Surface Mounted Case. *(See Below)*

Size & Weights: 370mm x 260mm x 110 mm 4.5Kg

www.sensorium.co.uk

L7700 IP Power Supply Contact Inputs.

The L7700 features two on-board independent closing contact inputs which may be configured for the following operations:

APPLY EVENT – Create a call on the system, Call type, address and user may be specified using the fields on screen.

RESET UNIT - Perform a hard reset to the L7700.

RESET SLOTS - Reset all incoming events on a bridged or distributed system

RESET OP1 For example an output can be used to activate a strobe or sounder, the input can be configured to reset that output to act as a mute or reset button/key.

RESET NET. Reset all devices (Call Points, Displays etc) on the L7700 Output Network.

CONNECTING THE INPUTS

The inputs are simply closing contacts taken to 0V, there is a 10K pull up resistor to 3.3V on each contact input. Do not apply voltage to these inputs, if connected to other systems they **must be isolated** using a relay or similar.

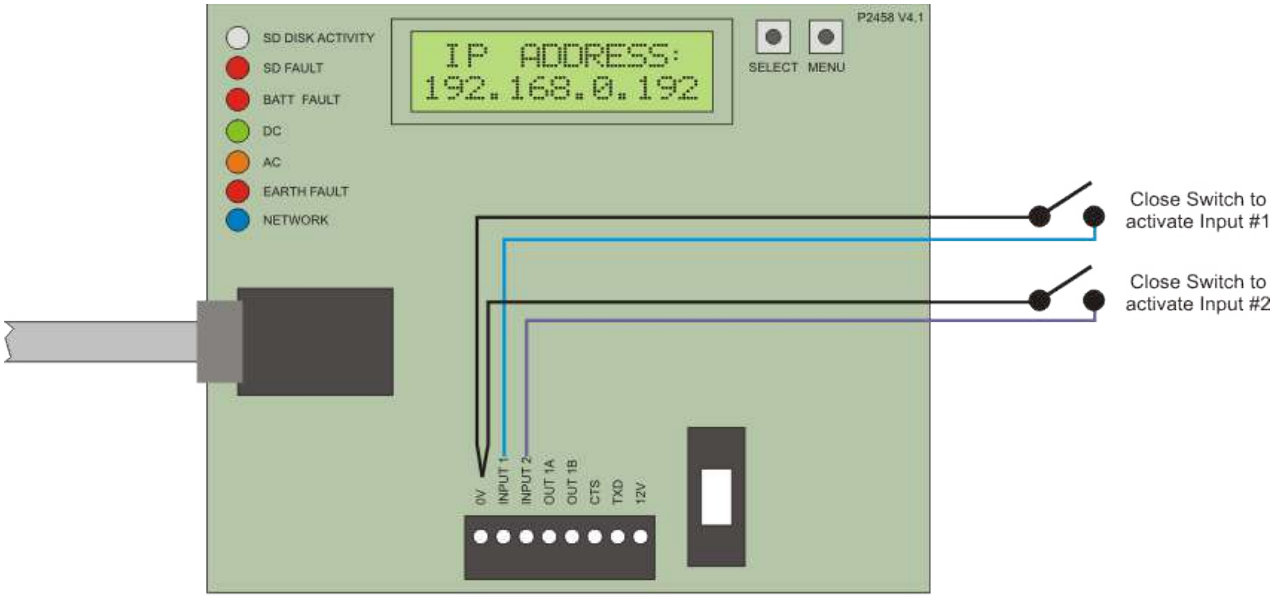

www.sensorium.co.uk

L7700 IP Power Supply Relay Output.

The L7700 features a single normally open volt free relay. This may be used in conjunction with the on-board 12V supply to power up to 100mA, Alternatively, an external power supply may be used to power an external device such as a strobe or sounder etc. As the on-board relay provides isolation, this may be directly connected to third party equipment up to 24V DC 500mA.

CONNECTING THE RELAY OUTPUT.

The L7700 features a single normally open volt free relay, this may be used in conjunction with the on-board 12V supply to operate a 12V up to 100mA load. Larger loads up to 500mA may be switched using an external supply or switched via a power relay.

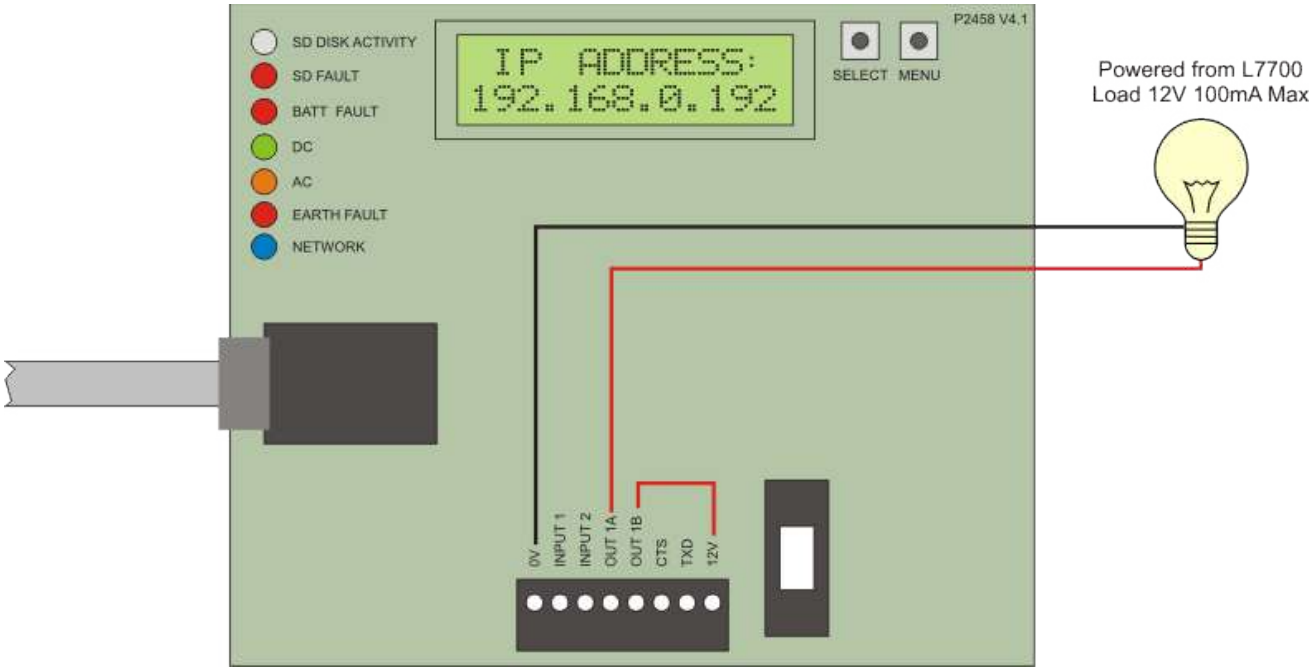

www.sensorium.co.uk

L7700 IP Power Supply on-board RS232 Serial Port.

The IP16 Power Supply contains a dedicated RS232 Serial Port which is used to send messages to Scope Pagers and other serial devices. The global settings for the serial port are accessed from the Despatch screen and Serial Settings. Here the Baud Rate, Data Bits, Flow Control (CTS) etc are configured. You must tick Enable Serial Port before any data can be sent.

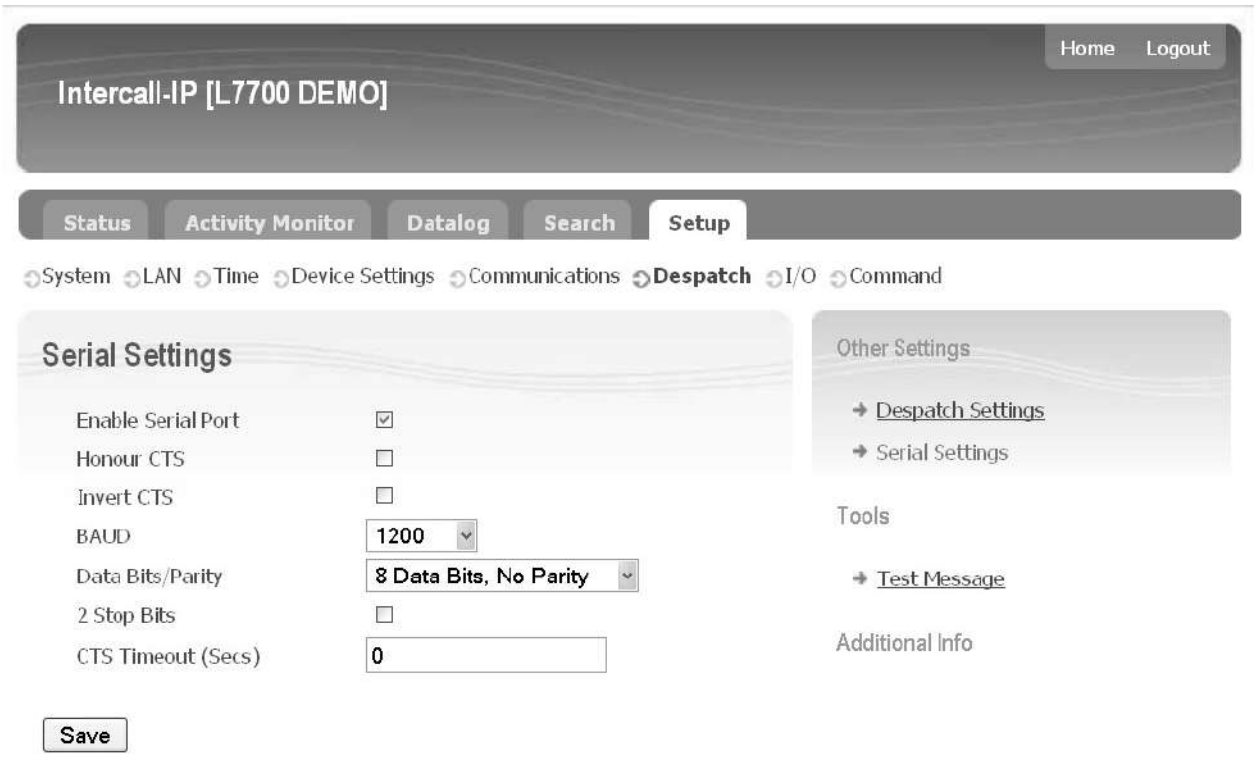

Connecting the Scope Transmitter to the L7700 RS232 Port.

The Pager transmitter is connected directly to the L7700 PCB using the on-board RS232 port. The diagram below shows the connections required. Note the CTS line is optional and may not be required – refer to Scope/Paging equipment manual for more information.

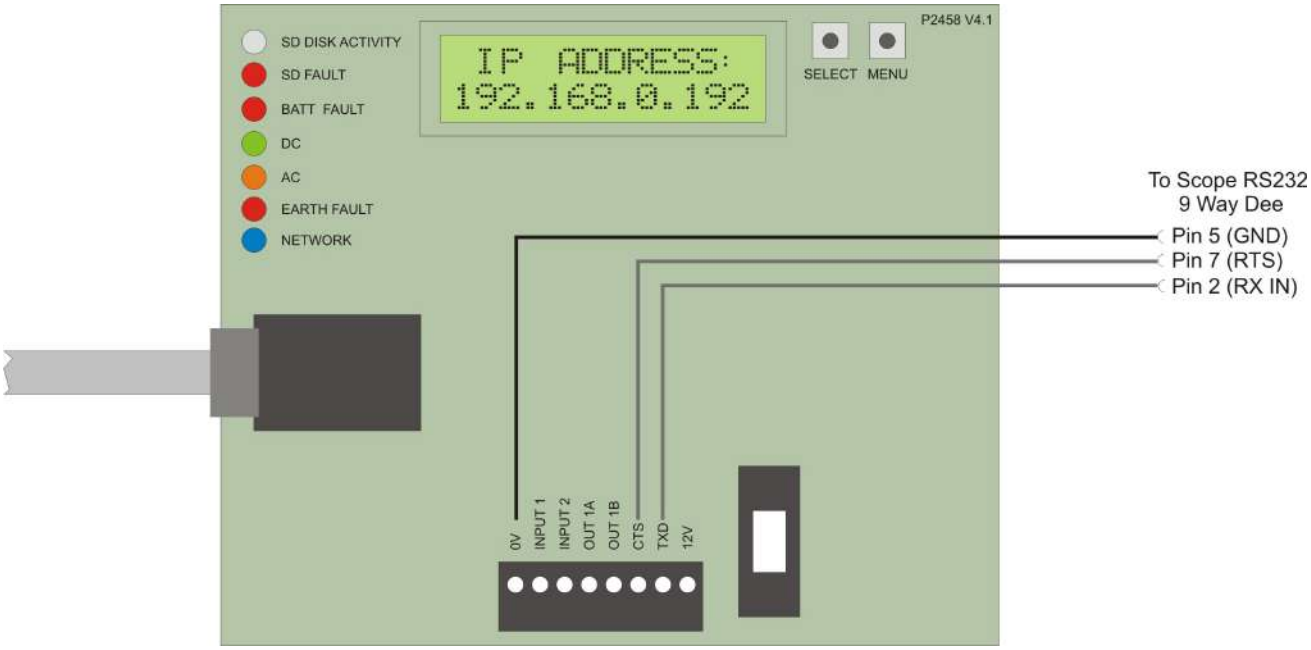

L622 Standard Call Point.

The L622 is the standard call point for the Intercall 600 non audio system and can generate up to six independent call levels indicated by the twin colour re-assurance LED. The 'call follower' sounder which is activated when the call point is in 'staff present' mode, alerts staff to other calls on the system. The jack socket will accept any closing contact input from pear leads, pressure mats, radio triggers and a host of other triggering devices. The X, X2 and L terminals are used to connect to CS1 Ceiling Pull Switches or SCP Slave Call Points. The L2 & X3 terminals are for SRP Slave Call Point connections. A Magnetic Reset version is available, order code L622M. For Non-Latching and remote reset applications, please see the **L634** on page 38.

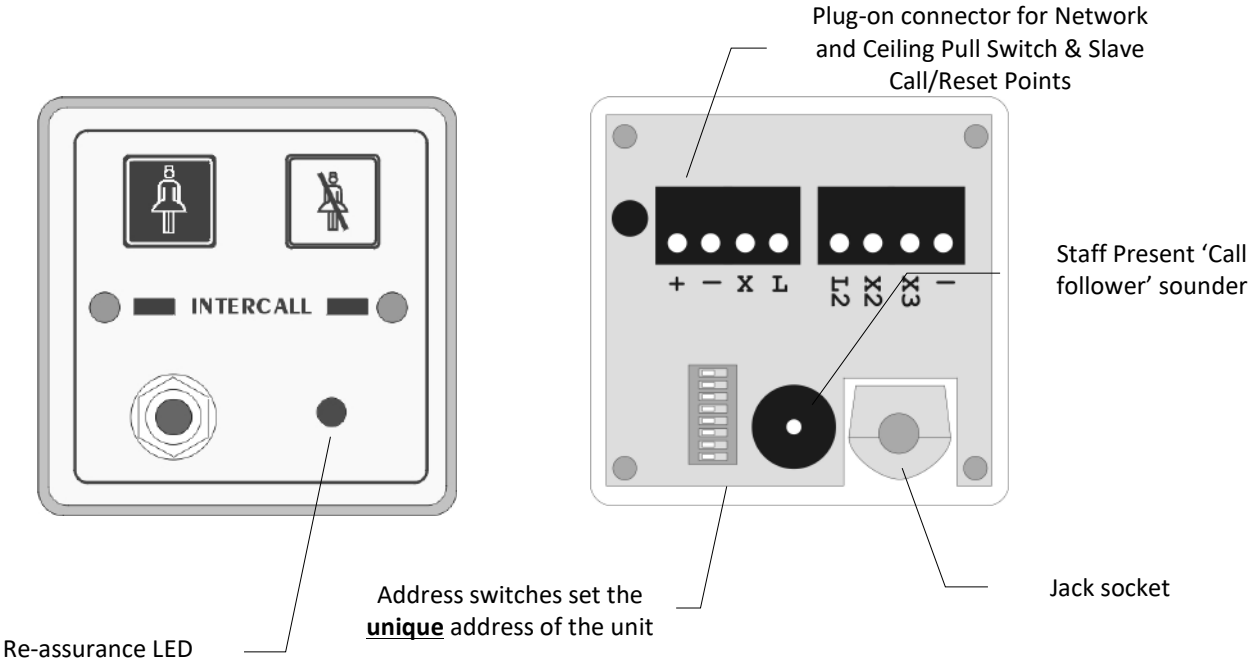

Network Terminals:	Connect to the Intercall 600 (2 wire) Network**.** [+, –] **OBSERVE POLARITY**
X Terminal:	Standard Call Input which automatically generates **System Text 3**. *This allows the input to have a secondary description, for example 'Ensuite'*
X2 Terminal:	Emergency Call Input which automatically generates **System Text 4**. *This allows the input to have a secondary description, for example 'Bathroom'*
X3 Terminal:	Reset / Present Input for SRP Slave Reset Points
Re-assurance LED:	Slow Red flashing – Standard Call Slow Red/Green flashing – Assistance Call Rapid Red flashing – Emergency/Crash Call Green flashing - Accepted Call – Staff on their way Constant Green – Nurse Present Mode
L Terminal:	Red LED Output for ceiling pull switches with built in re-assurance lights.
L2 Terminal:	Green LED Output for SRP (Slave Reset Points).
Pear lead Socket:	Intercall standard socket that will accept any normally open switch. *This socket can accept input from pear leads, pressure mats, radio triggers etc.*
Installation:	Flush or surface mount in standard 'single size' electrical backbox.
Size & Weights:	80 x 80 x 40 mm, 70g

www.sensorium.co.uk

L733 Door Monitoring & Access Control Point.

The L733 Door Monitoring an Access Control Point is designed to protect fire doors, entrance & exit doors or other sensitive areas from unauthorised access. The door is fitted with a magnetic contact (not supplied), which is used to trigger the call point and activate the call system. The unit is controlled with the use of a key token, which performs all functions when brought near the token detection area on the facia. The unit features standard call and emergency call generation, integral 20 second exit timer with audible bleep and mode jumper to prevent sensitive or dangerous exit doors being permanently left open. In mode I & II, the unit automatically re-arms when the door is closed. In mode III, the unit must be manually re-armed. The unit is supplied with one magnetic token.

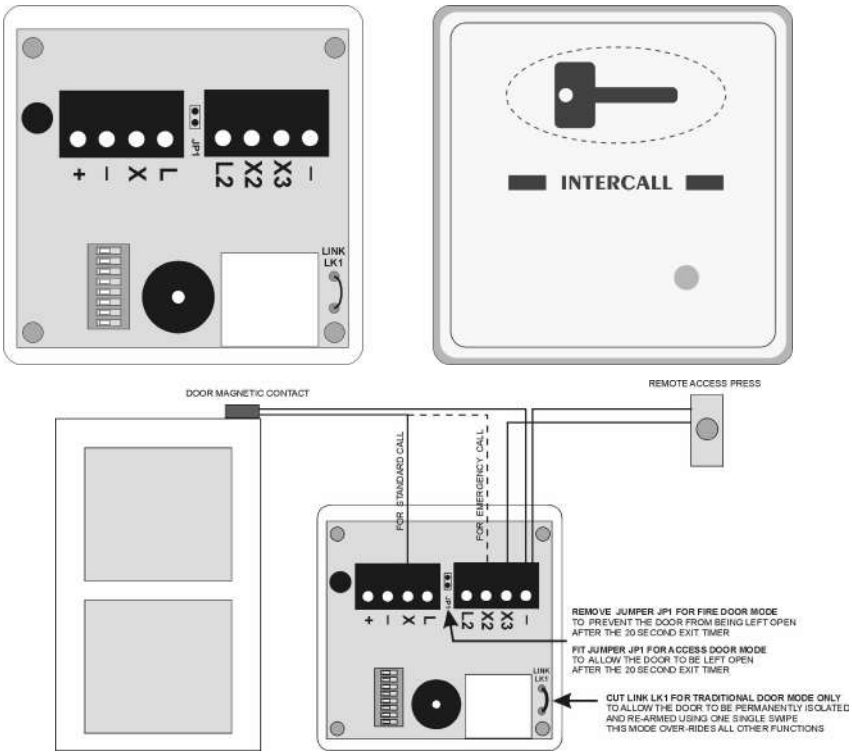

Network: Connect to the Intercall 600 or 700 (2 wire) Network**.** [+, –] OBSERVE POLARITY

X Terminal: Call Input, the unit will generate a standard call in alarm which will not upgrade to Priority.
X2 Terminal: Emergency Input, the unit will generate an emergency call in alarm.
X3 Terminal: Remote authorised access press button input, this mimics the functions of the token area in a remote location (e.g external side of the door)

Exit Timer: To allow authorised personnel to use the door without generating an alarm. Before opening the door, swipe the token area once, the green LED will flash and the sounder will pulse. The door may now be opened, however, if the door remains open after the 20 seconds, the alarm will sound. If the door is opened & shut within 20 seconds, the unit will re-arm immediately.

JP1 Fitted: **Mode I:** This allows the door to be permanently left open. Before opening the door, swipe the token area twice, the sounder stops & the LED is continuously green. The door can now be opened and left open without an alarm being generated. Once the door is shut, the unit will automatically re-arm immediately.

JP1 Removed: **Mode II:** This prevents the door from being permanently left open & disables the double swipe feature described in Mode I above.

LK1 Cut: **Mode III:** This removes the exit timer and converts the single swipe into on/off mode. Before opening the door, swipe once to isolate the door & the green LED will light. Opening and closing the door while isolated has no effect. Close the door and swipe to re-arm the unit.

Alarm Reset: The alarm is reset but closing the door and swiping the token area once.
Installation: Flush or surface mount in standard 'single size' electrical back-box.

Size & Weights: 80 x 80 x 40 mm, 70g

www.sensorium.co.uk

L744 RFID Door Monitoring & Access Control Point.

The L744 RFID Door Monitoring Point is designed to control door access, simultaneously generating an alarm and controlling door locking via the on-board relay. Staff, carry a RFID proximity card, which isolates the alarm and unlocks the door simultaneously. The unit can be configured to allow (or prevent) the door from being held open, alternatively a simple swipe on/off mode is available. Two units can be used back-to-back on a single door providing two way access. The unit can be programmed to accept *normally-open* or *normally-closed* door contacts, please refer to page 10 and 75 for more information.

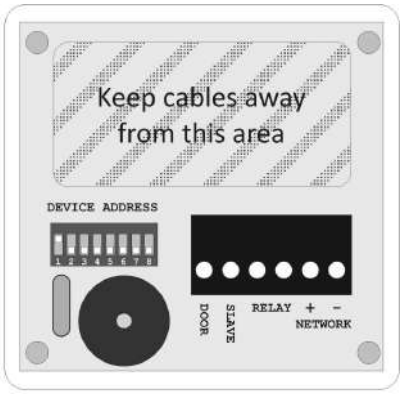

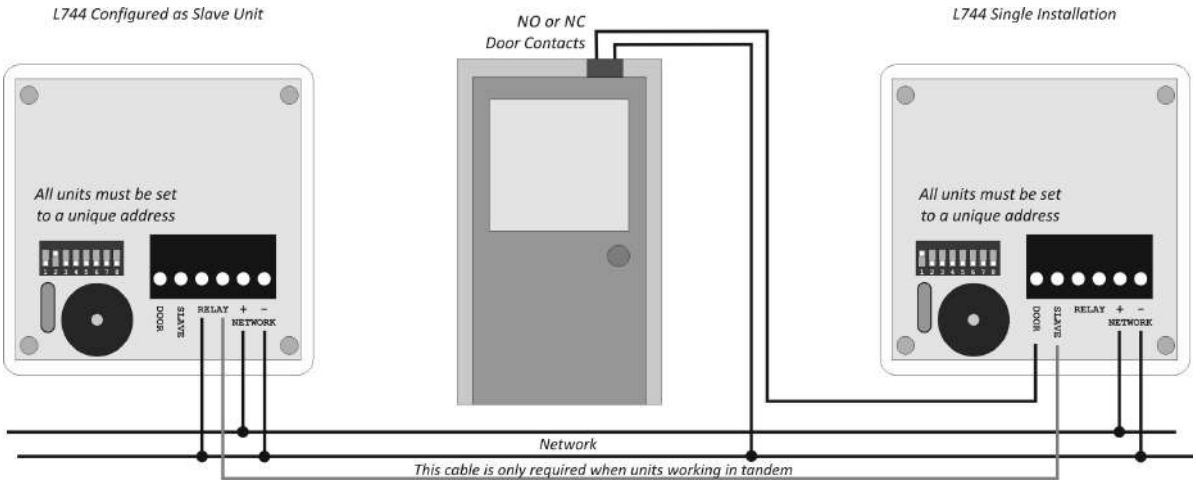

Two units working in tandem to provide two-way security for a single door.

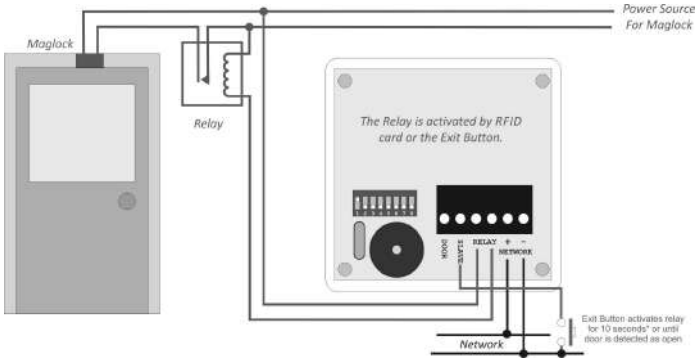

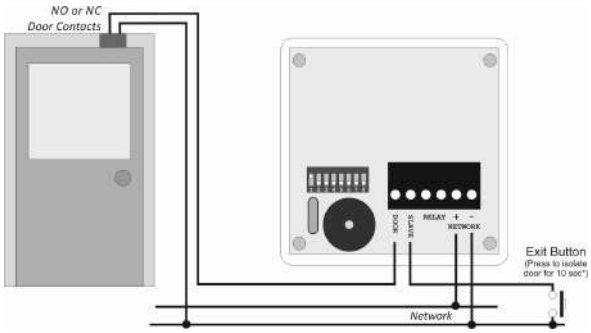

Using the on-board relay to operate door locking. *Exit Button for Authorised Staff*

Network:	Connect to the Intercall Net (+) (-) OBSERVE POLARITY!
Door:	Door contacts connect between this terminal and Net(-) *(Can be programmed N/O or N/C)*
Slave:	Exit button or used when two L744s are working in tandem either side of a door.
Relay:	Volt Free Relay (Can be programmed N/O or N/C) *The Relay is activated by RFID card or the SLAVE button input. The Relay is activated for 10 seconds* or until the door is detected as open.*
Proximity Card:	ISO15693 programmed with Intercall RFID Card Programmer.
Installation:	Flush/Surface UK Single electrical back-box, **NOTE: Metal backboxes reduce card performance.**
Configuration:	* Programmable using *Intersniff* software connected via the L7700 Controller – See page 75.
Size & Weights:	80 x 80 x 40 mm, 70g

www.sensorium.co.uk

L628 LCD Display Unit.

A display unit is required in every location where calls are to be shown and the alarm is to sound. The L628 features two-line LCD display with backlight and a multi-level adjustable alarm. *(See page 5 for more information)* It is capable of sounding a different tone for selected call points (doors, drug cupboards, telephone, etc) and only displaying specific call points *(Zoning)* if required. More information can be found from page 55. There is an open collector output, which can be connected to the RB1 Relay Board [See Page 33] or used to directly trigger external equipment. All displays are identical but can be configured on site to operate independently.

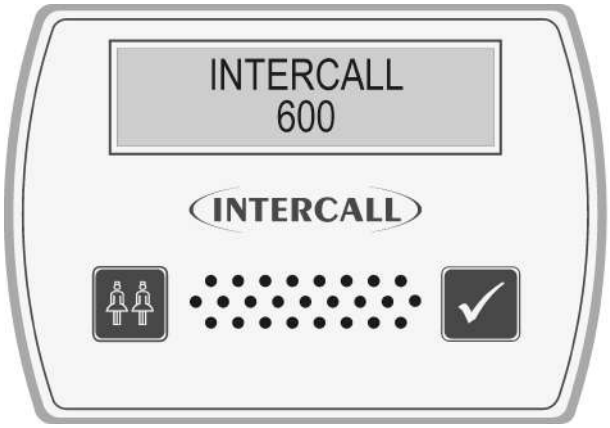

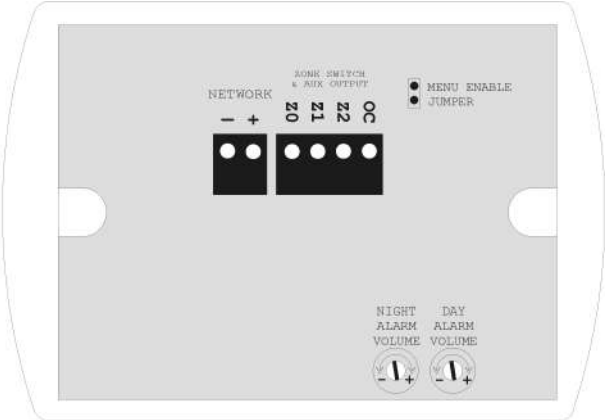

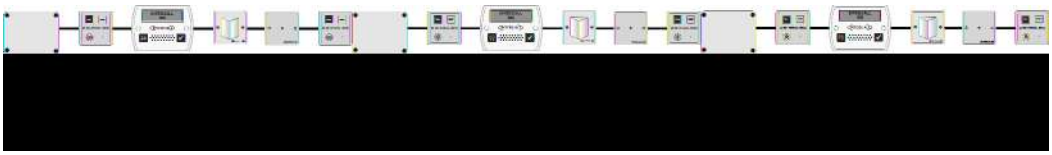

Network Terminals: Connect to the Intercall 600 (2 wire) Network**.** [+, –] OBSERVE POLARITY

Z0, Z1, Z2: Connect to zone switch or wire link *(See 'Zone Switch Connection' Below)*

OC Output Terminal**:** Open collector output active continuously when the alarm is sounding.
Note: Rating 12vDC 100mA. Minimum [ON] resistance = 100 Ohms.
*The OC terminal may be used to trigger an external device directly, which will accept this type of input. Alternatively you may connect this terminal to a **RB1 Relay Board** which will provide normally open & normally closed 'dry' contacts.*

Night Alarm Setting: This controls the alarm volume when in 'night' mode.

Day Alarm Setting: This controls the alarm volume when in 'day' mode.
To change between the 'day' and 'night' mode you will need to connect a switch to the DAY/NIGHT terminals on the Master Power supply. (See page 20)

Menu Enable Jumper: Remove to prevent access to the engineers display menu.

Sounder output: Typical Maximum 92db@30cm.

Zone Switch: This text is intended as a technical reference only and details of zoning are discussed on page 58. When a display is required to only sound for specific call points, we need to connect a switch or permanent wire link to the 'Z' terminals. The following connections force the display to use the address windows that are programmed on site:

Z1 Not Connected,	&	Z2 Not Connected	= Global (Sound for all calls)
Z1 Not Connected	&	Z2 Connected to Z0	= Use Address Window C
Z1 Connected to Z0	&	Z2 Not Connected	= Use Address Window B
Z1 Connected to Z0	&	Z2 Connected to Z0	= Use Address Window A

Installation: Flush mount - use standard 'double size' electrical backbox. Surface mount use BB1 (See page 16). Connects to system two core and optional zone switch and auxiliary devices.

Size & Weights: 80 x 140 x 40 mm, 200g

www.sensorium.co.uk

L748 Corridor LED Display Unit.

The L748 Corridor LED Display is ideal for where calls need to be easily and clearly seen by staff on the move. It may be used in several applications including hospitals, doctors' surgeries and larger nursing homes. Call information is very clearly displayed on the illuminated 16 character display. The integral alarm is adjustable for day and night volumes The display may be configured to show a standing message or appear "off" when no calls are active on the system.

The unit is compatible with the **INTERCALL 700** protocol only and shows the same text as the LCD display units. The unit can either operate as the only type of display on the system or can be used in conjunction with the standard LCD units. Operation of the unit is similar to the standard LCD units, with all calls numbered in queue order. Emergency and Attack calls are "flashed" on the display to show the higher priority while normal, assistance and priority calls are stored in memory but not displayed until the higher priority calls are dealt with. There are no user controls on the unit, however, the display menus controls are available and the unit has a unique display menu structure for configuration. These menus are configured using the two buttons in a similar manor to the standard display. For more information on the L748 Display Menus, please refer to page 58

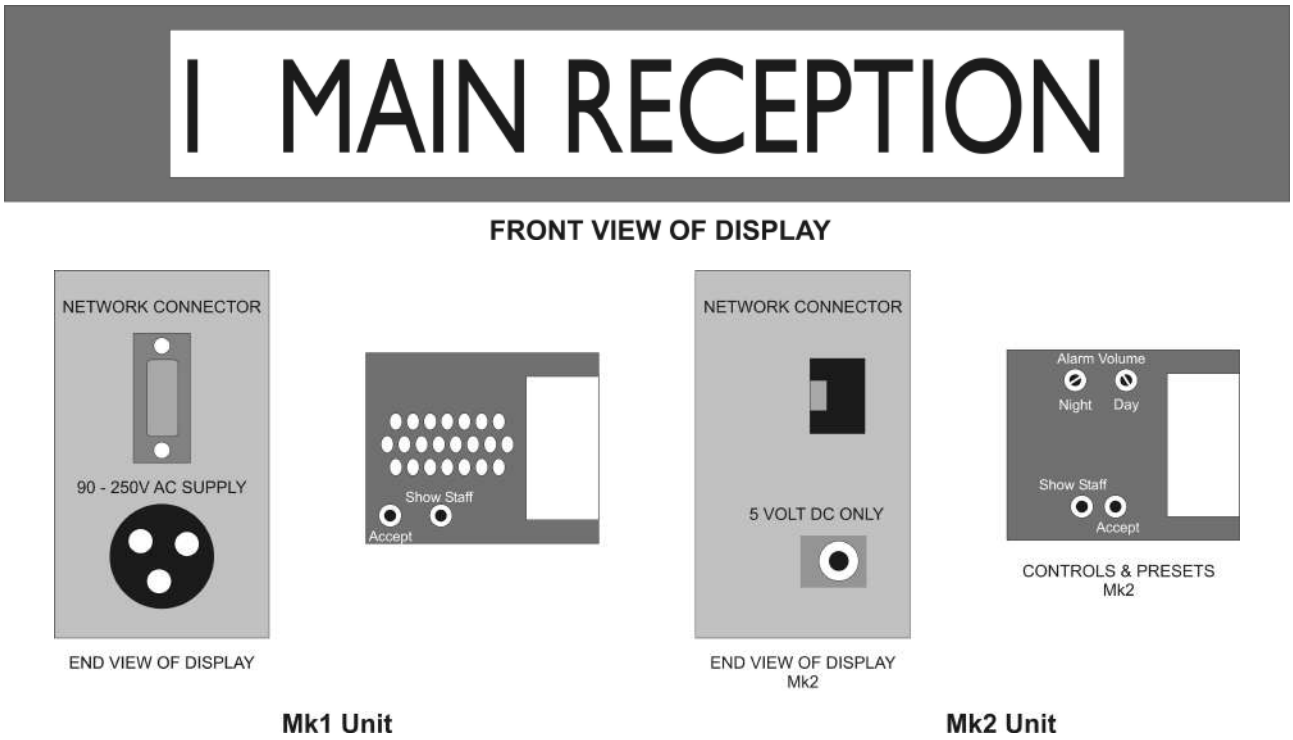

There are two versions of this unit, the earlier Mk1 unit is directly supplied with a 90-250VAC-15W (max) supply whereas the Mk2 unit is supplied with a separate 5V DC Power Supply with an input voltage range of 90-230VAC.

Installation: The unit is supplied with a mounting bracket, which is secured to the wall first and the display is mounted onto the bracket, for straightforward installation and maintenance purposes.

Connections (Mk1): The Mk1 L748 is supplied with 'open ended' 3 metre mains supply lead and 3 metre data lead, both of which are terminated with suitable connectors to mate with the L748.

Connections (Mk2): The Mk 2 L748 is supplied with a data cable terminated with a RJ11 connector *(Shown above)* and 'open ended' spade connectors & separate 5V Power Supply with IEC mains lead. The network + & – connects to the open ended red and black leads from the RJ11 connector (do not connect to the Yellow or Blue cables) The 5V power supply simply plugs into the mating connector on the L748.

Character Size: H60mm x W40mm Red Illumination.

Physical Size: W910mm x H95mm x D60mm (excluding mounting bracket)

www.sensorium.co.uk

L746 Addressable Overdoor Light.

The L746 Overdoor light may be located above a door or corridor to indicate the status of specific call point(s). It is fitted with Red and Green LED's which mimic the re-assurance indicator on the call points. The unit is fully addressable and only connects to the Network. The unit features 2 sets of DIL switches, and the unit will respond to any device between the Lower and Higher device address. The unit is available with an integral sounder as **L746s**.

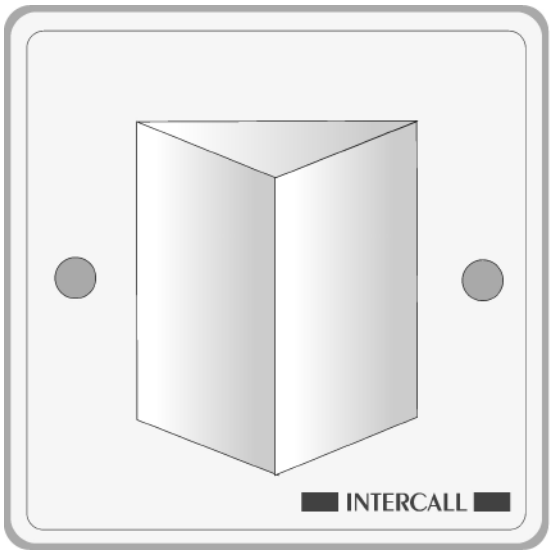

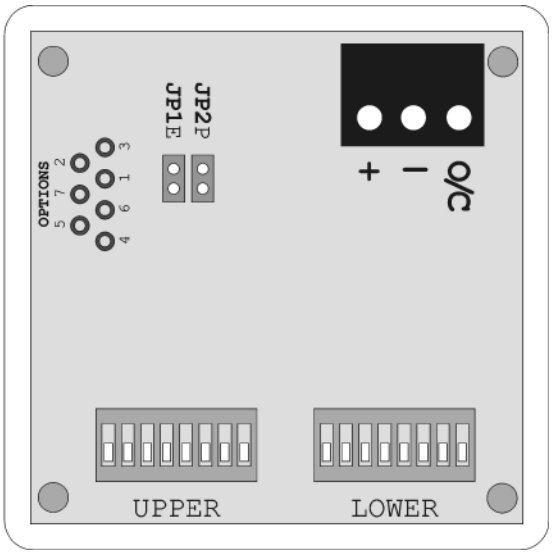

Network Terminals: Connect to the Intercall 600 or 700 (2 wire) Network**.** [+, –] **OBSERVE POLARITY**

OC Output Terminal**:** Open collector output active continuously when the alarm is sounding.
Note: Rating 12vDC 100mA. Minimum [ON] resistance = 100 Ohms. The OC terminal may be connect to RB1 Relay Board to provide normally open & normally closed volt free contacts.

Jumper JP1: **Emergency Only Jumper -** When fitted, the unit will *only* indicate emergency calls.
Jumper JP2: **Nurse Present Jumper -** When fitted, the unit will ***not*** indicate nurse present status.

Option Drill Outs: *These are activated by carefully twisting a 3mm drill bit between the finger & thumb on the required hole to remove the printed circuit pad and breaking the connection.*
Drill Out 1 = Unit Responds to Attack Only
Drill Out 2 = Unit Responds to Emergency Only
Drill Out 3 = Unit Responds to Call Only
Drill Out 1+2 = Unit Responds to Priority Only
Drill Out 1+3 = Unit Responds to Accept & Speech Only
Drill Out 2+3 = Unit Responds to Assistance Only
Drill Out 1+2+3 & FIT JP2 & NO FIT JP1 = Unit Responds to Isolate Only & O/C Operates
Drill Out 1+2+3 & NO FIT JP1 & JP2 = Unit Responds to Presence Only & O/C Operates
Drill Out 4 = Fr Light Patterns
Drill Out 5 = Cell Call Indicator*
Drill Out 4+5 = Code Blue Option*
Drill Out 6 = Convert O/C Output to single 1 second pulse.
Drill Out 7 = Convert O/C Output to Pulsed output.
Drill Out 6+7 = Standard Call Flashes Green LED.
** - Special required to enable this feature.*

L746s Sounder : The sounder mimics the LCD display sounding patterns. (only applies to L746S)
Lower Address : Sets the lowest call device address that the light will show.

Upper Address : Sets the Upper call device address that the light will show. *The L746 will respond to all call devices between the lower & upper addresses with the highest level of call. Overdoor light settings may overlap so that more than light will respond to several call points.* ***If the unit is required to respond to a single call point address, set both lower and upper DIL switches to the same address.***

Installation: Flush or surface mount in standard 'single size' electrical backbox. (See page 16). Connects to system two core and optional ceiling pull switch and auxiliary devices.

Size & Weights: 80 x 80 x 40 mm, 70g

www.sensorium.co.uk

RB1 Relay Board.

The RB1 Relay board converts the Open Collector (O/C) output from the L746 Overdoor Lights and selected LCD Displays, into voltage free 'Normally Open' and 'Normally Closed' contact sets. The unit is also fitted with a Nominal 12v output derived from the Network voltage, which may be used to drive low current (Max Load 10mA) devices from the network. The unit may also be used to trigger a call point (or similar device) from a DC Voltage input.

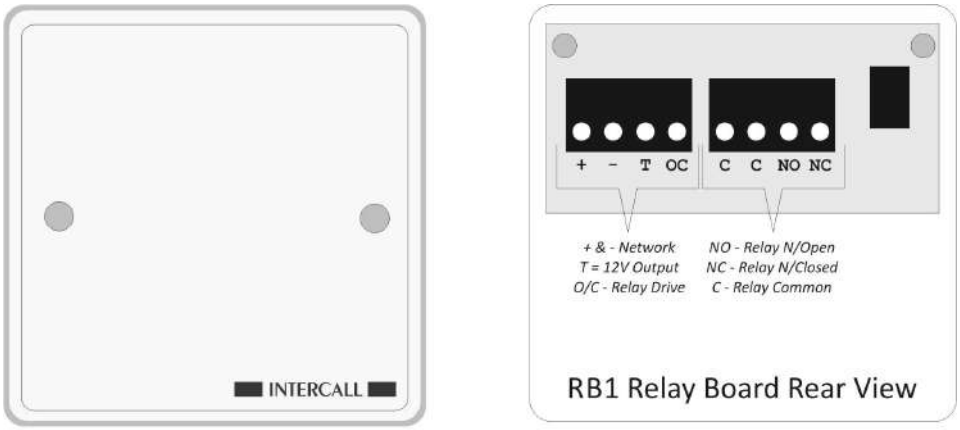

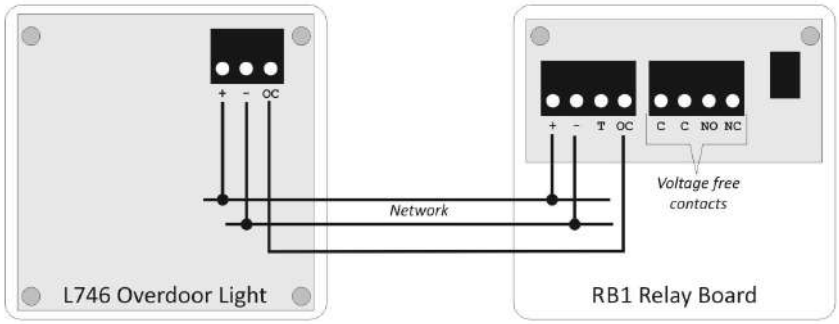

Selected LCD Displays are also fitted with the O/C terminal and may be used to control the RB1 Relay

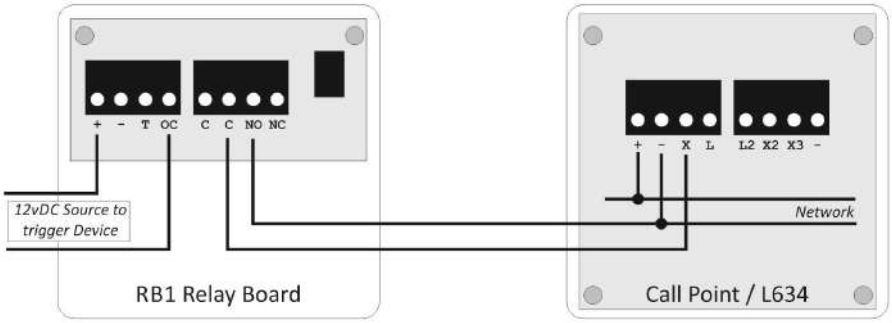

Configuring the RB1 to allow an DC Voltage input to trigger a Call Point or Device.

Network Terminals: Connect to the Intercall Network**.** [+, –] OBSERVE POLARITY !

T Terminal: 12volt DC output which may be used to drive external equipment which requires a DC supply. **MAXIMUM OUTPUT LOAD: Nominal 12VOLTS 10mA.**

O/C Terminal: Open collector input from L746 Overdoor light to control relay.

C: Relay Common contact (two terminals provided)
NO: Relay 'Normally Open' contact
NC: Relay 'Normally Closed' contact
MAXIMUM RELAY CONTACT RATING: 24 VOLTS DC 500mA.

Installation: Flush or surface mount in standard 'single size' electrical backbox. (See page 16)

Size & Weights: 80 x 80 x 40 mm, 70g

www.sensorium.co.uk

L714 Remote Sounder.

The Remote Sounder is designed for use in areas where an alarm signal is required to attract attention but no indication of call location is required. The sounder is similar in operation to the LCD Display Unit with a multi level adjustable alarm but has only limited zoning facilities. Any assistance or emergency call on the system will over-ride the standard call tone. The unit may be configured to respond to all call levels or emergency and attack calls only.

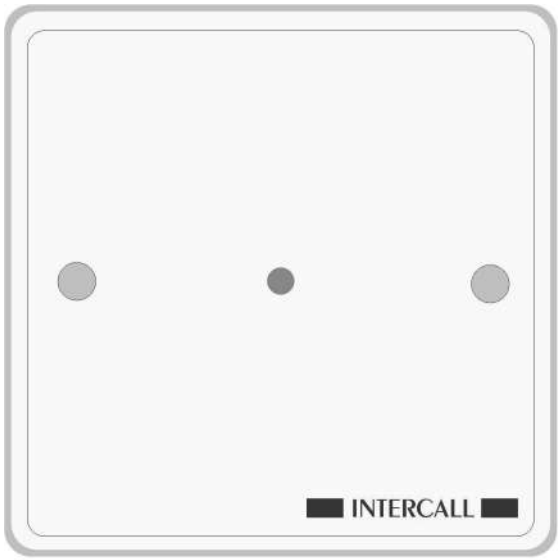

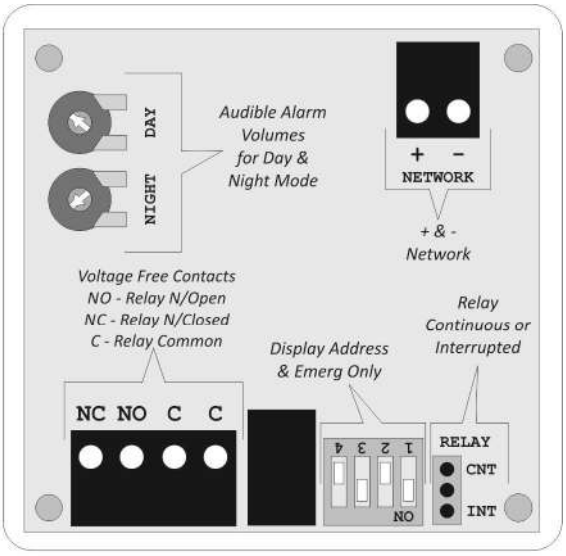

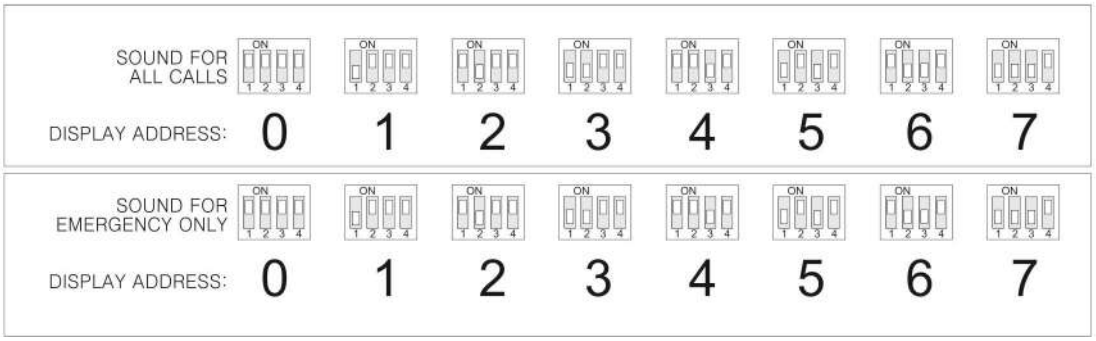

Network Terminals: Connect to the Intercall 600 or 700 (2 wire) Network**.** [+, –] OBSERVE POLARITY

SW1,2,3: **Display Address.** These set the "Display Address" setting for the remote sounder. They are only used on a system that is to be zoned. *The "Display Address" settings enable an address window to be set up on one display copied to all displays and remote sounders set to the same "Display Address". Please refer to page55 for more information on zoning.*

SW4: **Mode.** When OFF the sounder will operate for Emergency and Attack calls only.

Night Alarm Setting: This controls the alarm volume when in 'night' mode.

Day Alarm Setting: This controls the alarm volume when in 'day' mode.
To change between the 'day' and 'night' mode you will need to connect a switch to the DAY/NIGHT terminals on the Master Power supply. See page55.

Relay Control Jumper: The relay may be operated **Cont**inuously or **Int**ermittently depending on the position of this jumper. Continuous mode closes the relay while there is an active call and Intermittent mode closes and opens the relay in synchronisation with the sounder alarm.

Sounder output: Typical Maximum 81db@30cm.

Installation: Flush or surface mount in standard 'single size' electrical backbox. (See Page 16). Connects to system two core and optional zone switch and auxiliary devices.

Size & Weights: 80 x 80 x 40 mm, 70g.

www.sensorium.co.uk

FJB2 Fused Junction Board.

The FJB2 replaces the earlier FJB1 and provides four 'spur' outputs from the network spine with each output incorporating a over current/voltage and reverse polarity protection device. A front panel mounted red/green LED indicates the condition of the internal fuses and continuously monitors the network data signals. Individual fuse failure LED's are mounted on the reverse of the unit and in the event of a cable fault, on one of the outputs, the 'spur' will be isolated without disabling the entire cable network.

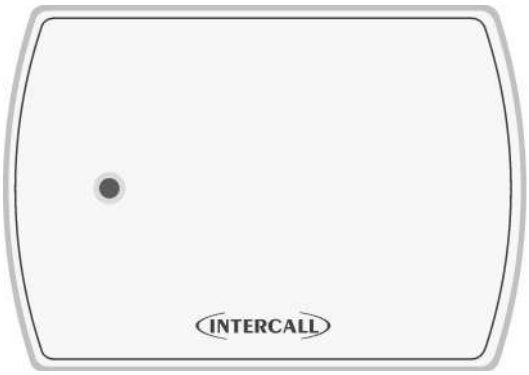

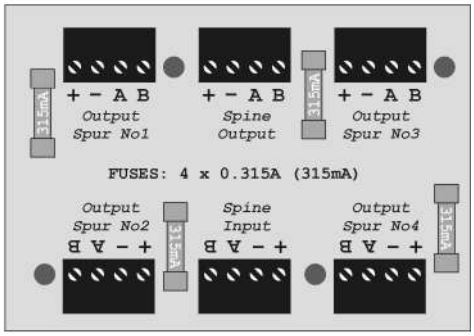

1.5mm² Spine out
to next FJB2

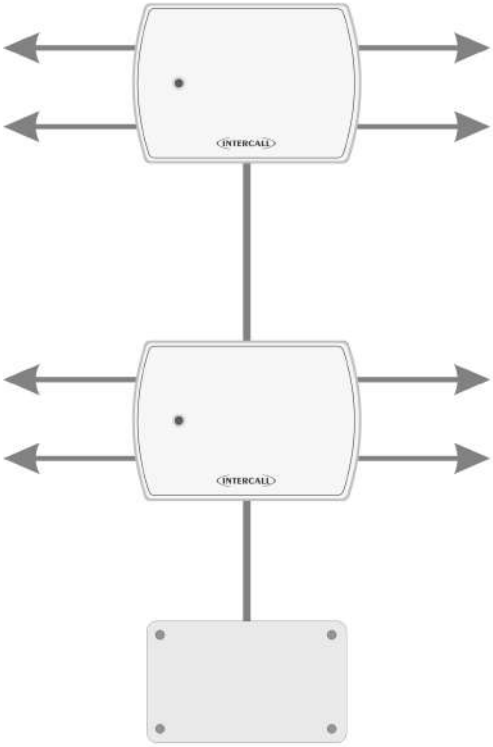

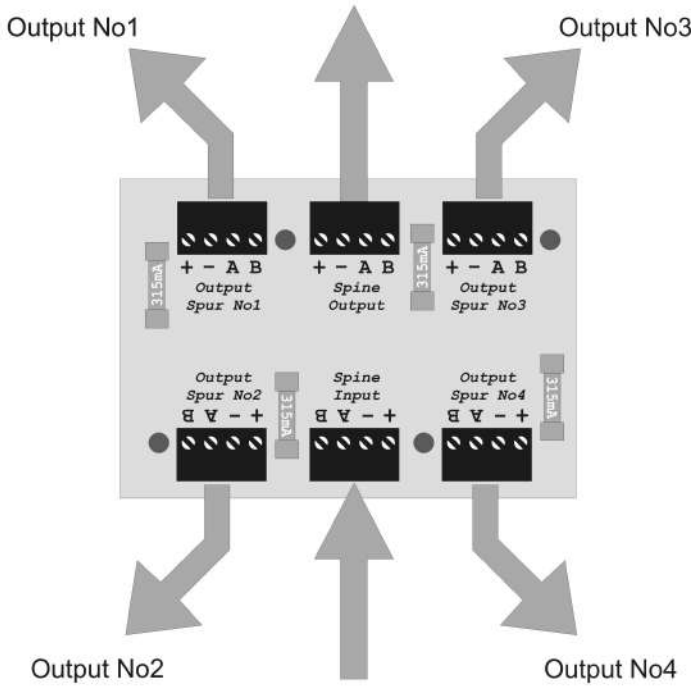

1.5mm²Spine in
From PSU

Input / Output Terminals:	Connect to the network spine and can be daisy chaned as shown above. **Note:** ***The two Input/Output terminals are not protected or monitored.***
Output(s)1,2,3,4:	Individually fused and monitored network outputs.
Fuses:	4 off **315**mA (0.315Amp) Anti-Surge 20mm Fuses.
Status LED indications:	Flashing Green – Network healthy & All fuses ok. Flashing Red – Immediate Network data error. Flashing Red/Green – Historical Network Data Error. (In last 10 minutes) Continuous Red – Fuse Failure. (Remove unit to investigate further)
Installation:	Flush mount into 'double gang' electrical back-box. Surface mount using BB1.
Size & Weights:	160 x 115 x 20 mm, 70g

www.sensorium.co.uk

L758 Audio Display Unit.

An Audio Display Unit is required in every location where calls are to be shown, the alarm is to sound and the intercom facility is required. It features a two line LCD display with back-light, multi-level adjustable alarm, full two-way intercom facility to Audio call points and voice page facility to other displays and call points. It is capable of sounding a different tone for selected call points (doors, drug cupboards, telephone, etc) and only displaying specific call points (Zoning) if required. More information can be found from page 55. There is an open collector output which can be connected to trigger external equipment such as pagers, lamps and sounders. All displays are identical but can be configured on site to operate independently. The unit flush mounts into a standard double gang backbox or may be surface mounted using the Intercall **BB1.**

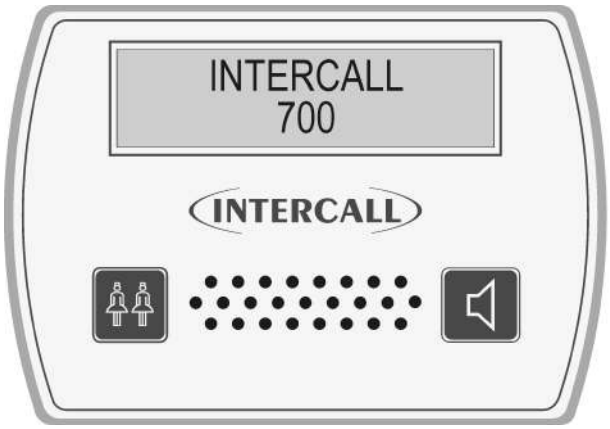

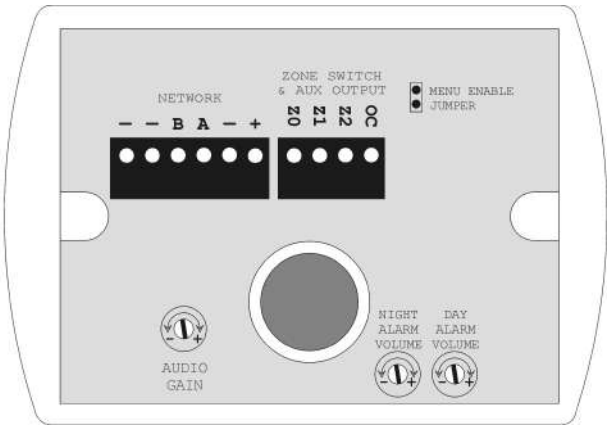

Network Terminals: Connect to the Intercall 700 (4 wire) Network**.** [+, –,A,B] Additional terminals are provided for the Belden screen drain wire termination – Observe Polarity !

Z0, Z1, Z2: Connect to zone switch or wire link *(See 'Zone Switch Connection' Below)*

OC Output Terminal**:** Open collector output active continuously when the alarm is sounding.
Note: Rating 12vDC 100mA. Minimum [ON] resistance = 100 Ohms.
*The OC terminal may be used to trigger an external device directly, which will accept this type of input. Alternatively you may connect this terminal to a **RB1 Relay Board** which will provide normally open & normally closed 'dry' contacts.*

Night Alarm Setting: This controls the alarm volume when in 'night' mode.

Day Alarm Setting: This controls the alarm volume when in 'day' mode.
To change between the 'day' and 'night' mode you will need to connect a switch to the DAY/NIGHT terminals on the Master Power supply. (See page 20)

Audio gain control: Controls the speech level output from the display unit. This does not effect the volume from the speaker in the unit.

Menu Enable Jumper: Remove to prevent access to the display menus and disable text download reception.

Zone Switch: This text is intended as a technical reference only and details of zoning are discussed on page 58. When a display is required to only sound for specific call points, we need to connect a switch or permanent wire link to the 'Z' terminals. The following connections force the display to use the address windows that are programmed on site:

Z1 Not Connected,	&	Z2 Not Connected	= Global (Sound for all calls)
Z1 Not Connected	&	Z2 Connected to Z0	= Use Address Window C
Z1 Connected to Z0	&	Z2 Not Connected	= Use Address Window B
Z1 Connected to Z0	&	Z2 Connected to Z0	= Use Address Window A

Installation: Flush mount - use standard 'double size' electrical backbox. Surface mount use BB1. (See page 16). Connects to system two core and optional zone switch and auxiliary devices.

Sounder output: Typical Maximum 92db@30cm.

Size & Weights: 80 x 140 x 40 mm, 200g

www.sensorium.co.uk

L722 Infra Red Call Point.

The L722 Infra Red Call Point is similar to the L622 button reset unit, with the additional facilities of an infra red receiver. The unit may be used as part of an Intercall 600 or 700 system and the infra red receiver gives the system true portability with the use of the TIR pendants and STC staff triggers. Please refer to page 27 for more information on the L622 Call Point. Please refer to the information contained on page 17 for more information regarding installation and performance of the Infra Red receiver.

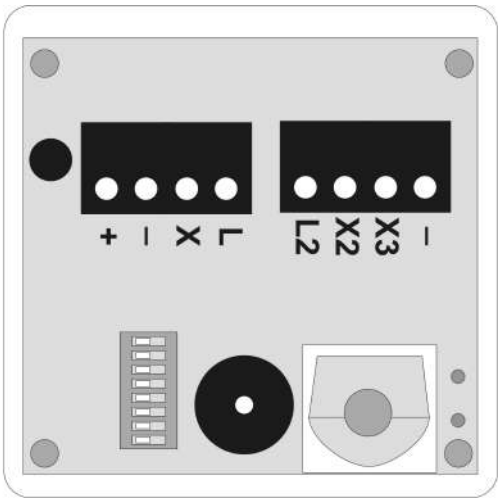

Network Terminals: Connect to the Intercall 600 or 700 (2 wire) Network**.** [+, –] OBSERVE POLARITY

X Terminal: Standard Call Input which automatically generates **Auxiliary Input Text 3**.
This allows the input to have a secondary description, for example 'Ensuite'

X2 Terminal: Emergency Call Input which automatically generates **Auxiliary Input Text 4**.
This allows the input to have a secondary description, for example 'Bathroom'

X3 Terminal: Reset / Present Input for SRP Slave Reset Points

L Terminal: Output signal to drive ceiling pull switches with built in re-assurance lights. *Max load 12v 10mA*
L2 Terminal: Output signal to drive Slave Reset Points Green LED. *Max load 12v 10mA*
- Terminal: Additional Network negative common terminal for auxiliary connections.

Address Switches: Set to unique setting between 1 and 215.

System User-Id: This feature allows the X1 and X2 input(s) to have a secondary description, for example **'**En-suit' or 'Ceiling Pull Cord' when activated – *Only available when using L717.*

Re-assurance LED: Slow Red flashing – Standard Call
Faster Red flashing – Priority Call
Slow Red/Green flashing – Assistance Call
Rapid Red flashing – Emergency/Crash Call
Green flashing - Accepted Call – Staff on their way
Constant Green – Nurse Present Mode

IR Receiver: Typically, the unit will cover a room 6m x 6m. **Important: Refer to notes on Page 17.**

Pear lead Socket: Intercall standard socket that will accept any normally open switch.

Installation: Flush or surface mount in standard 'single size' electrical backbox.

Size & Weights: 80 x 80 x 40 mm, 70g

www.sensorium.co.uk

L634 Network Input / Output Module.

The L634 is used to interface an external device(s) to the Intercall system network. The unit features three input triggers; two non-latching and one remote reset and two outputs; Re-assurance LED & Open Collector which can be used to trigger external equipment for normal or emergency calls. Typical applications include telephone ringing detectors (with TA1), contacts from fire alarm or other control panels or input from remote contacts etc. It may also be used to link two independent Intercall systems together to allow signalling, such that an active alarm on one system triggers a call on the other system and visa versa.

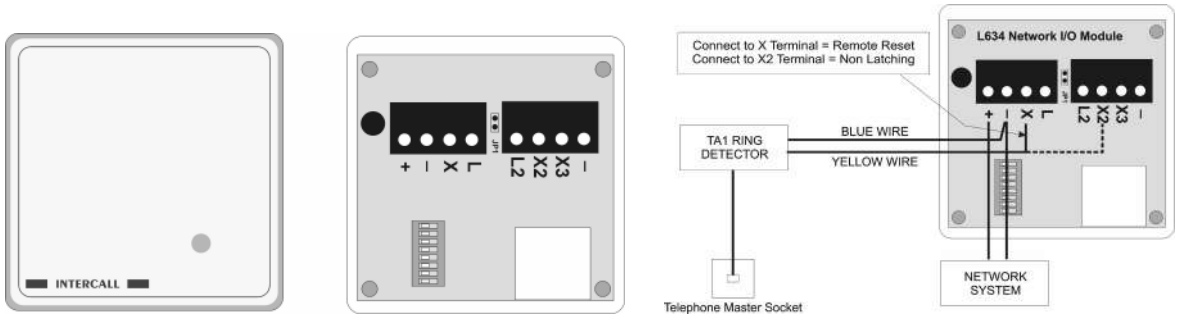

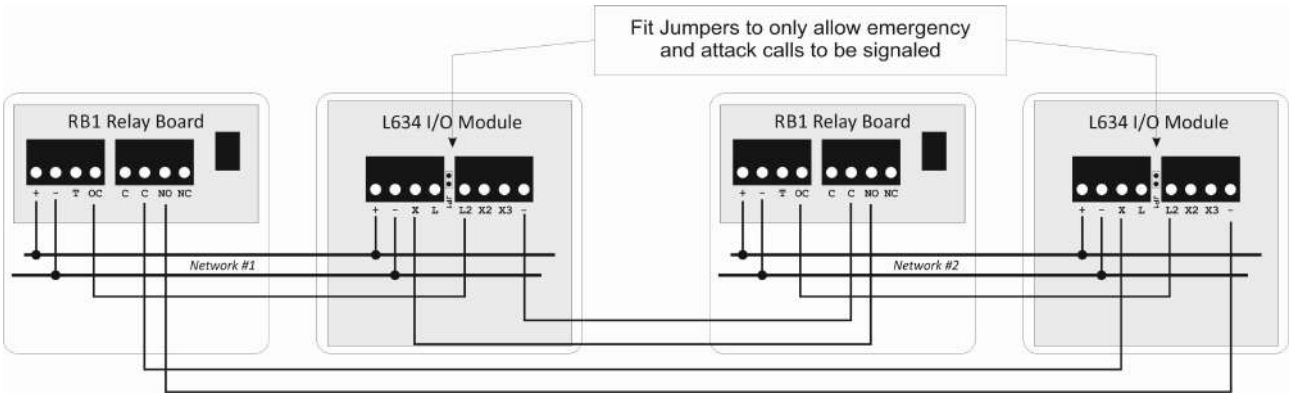

The L634 in use signalling between two independent Intercall systems, always use a pair of RB1 relay boards to keep the two systems isolated from each other. Above right, the L634 in use with the TA1 Telephone Ring Detector to trigger a call on the system when the telephone is ringing.

Network Terminals: Connect to the Intercall 600 or 700 (2 wire) Network**.** [+, –] OBSERVE POLARITY

X Terminal: Remote Reset Input. Connect to negative to trigger a Standard Call which is reset when the call is accepted at the display.

X2 Terminal: Non-Latching Call Input. Connect to negative to generate a Standard Call, when the connection to negative is broken, the call will automatically reset within 6 seconds. This call can be accepted at the display and will return after the accept timer has expired if the input trigger is still active.

X3 Terminal: Non-Latching Emergency Call Input. Connect to negative to generate an Emergency Call, when the connection to negative is broken, the call will automatically cancel within 6 seconds.

L Terminal: Re-assurance LED output +12V to confirm unit is triggered.

L2 Terminal: Open Collector Output, this output will only be active when there is a call on the Intercall Network, which does not originate from this device. When linking two independent systems together, use two RB1 Relay Boards to provide isolation as shown above.

JP1 Jumper: When fitted, the 'L2' output (described above) is only active for emergency and attack calls.

Installation: Flush or surface mount in standard 'single size' electrical back-box.

Size & Weights: 80 x 80 x 40 mm, 70g

www.sensorium.co.uk

L752 Audio Call Point.

An Audio Call Point is required for every individual call location on the system where the two way intercom facility is required. It features seven levels of call, hands free two way intercom, integral infra red receiver, programmable emergency button, audio page facility, audible call re-assurance, re-assurance LED and 'another call' sounder. The industry standard trigger socket will accept pear leads, pressure mats, portable radio triggers and a host of other triggering devices. The unit flush mounts into a standard double gang backbox or may be surface mounted using the Intercall **BB1**. Please refer to the information contained on page 17 for more information regarding installation and performance of the Infra Red receiver.

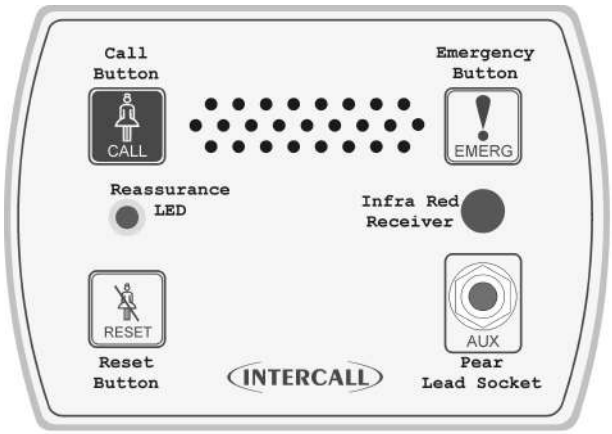

FRONT VIEW

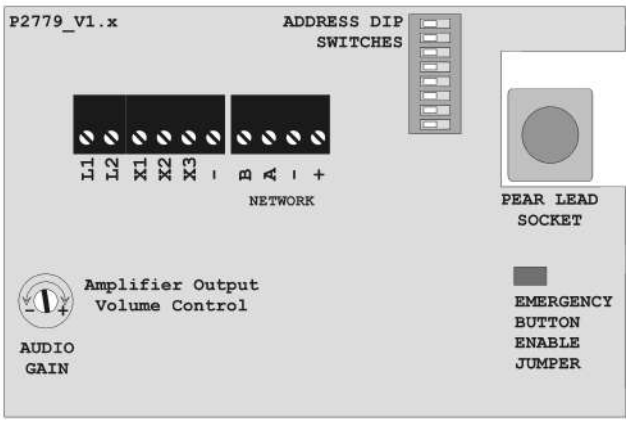

REAR VIEW

Network Terminals:	Connect to the Intercall 700 four wire Network. [A,B,+, –] OBSERVE POLARITY
X Terminal:	Standard Call Input which automatically generates **Auxiliary Input Text 3**. *This allows the input to have a secondary description, for example 'Ensuite'*
X2 Terminal:	Emergency Call Input which automatically generates **Auxiliary Input Text 4**. *This allows the input to have a secondary description, for example 'Bathroom'*
X3 Terminal:	Reset / Present Input for SRP Slave Reset Points
L1 Terminal:	Output signal to drive ceiling pull switches with built in re-assurance lights. *Max load 12v 10mA*
L2 Terminal:	Output signal to drive Slave Reset Point Green LED. *Max load 12v 10mA*
- Terminal:	Additional Network negative common terminal for auxiliary connections.
Emergency Jumper:	Remove to disable the Emergency button on the front panel.
Address Switches:	Set to unique setting between 1 and 215.
Re-assurance LED:	Slow Red flashing – Standard Call Faster Red flashing – Priority Call Slow Red/Green flashing – Assistance Call Rapid Red flashing – Emergency/Crash Call Green flashing - Accepted Call / Intercom operating [Slow Flash] Constant Green – Nurse Present Mode
Audio gain control:	Controls the speech level output from the call point. This does not effect the volume from the speaker in the call point.
IR Receiver:	Typically, the unit will cover a room 6m x 6m. **Important: See Page 17.**
Installation:	Flush mount using standard 'double size' electrical backbox or surface mount using BB1
Size & Weights:	160 x 115 x 25 mm 135g

www.sensorium.co.uk

L753 Audio Call Point.

The L753 Audio Call Point is required for every individual call location on the system where the two way intercom facility is required. It features seven levels of call, hands free two way intercom, integral infra-red receiver, audio page facility, audible call re-assurance, re-assurance LED and 'call follower' sounder. Emergency call is generated by pressing the Call and Reset Button simultaneously, and the voice intercom facility is only available for Call and Staff Assistance calls. The industry standard trigger socket will accept pear leads, pressure mats, portable radio triggers and a host of other triggering devices. The unit flush and surface mounts into a standard double gang backbox Please refer to the information contained within the installation leaflet for more information regarding installation and performance of the Infra Red receiver.

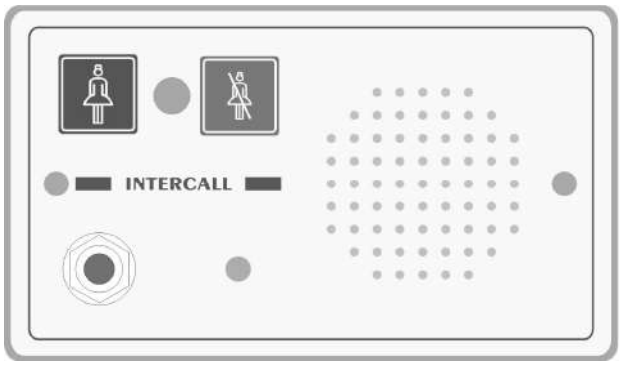

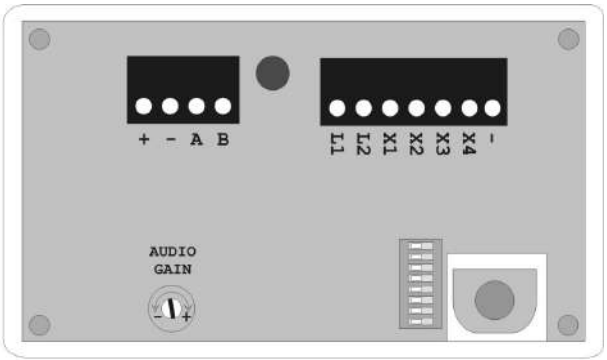

Network Terminals: Connect to the Intercall 700 four wire Network. [A,B,+, –] OBSERVE POLARITY

X Terminal: Standard Call Input which automatically generates **User ID #253**.
This allows the input to have a secondary description, for example 'Ensuite'

X2 Terminal: Emergency Call Input which automatically generates **User ID #254**.
This allows the input to have a secondary description, for example 'Bathroom'

X3 Terminal: Reset / Present Input for SRP Slave Reset Points

X4 Terminal: Standard Call Input which automatically generates **User ID #252**.
This allows the input to have a secondary description, for example 'Door''

L1 Terminal: Output signal to drive ceiling pull switches with built in re-assurance lights. *Max load 12v 10mA*
L2 Terminal: Output signal to drive Slave Reset Point Green LED. *Max load 12v 10mA*
- Terminal: Additional Network negative common terminal for auxiliary connections.

Address Switches: Set to unique setting between 1 and 215.

Re-assurance LED: Slow Red flashing – Standard Call
Faster Red flashing – Priority Call
Slow Red/Green flashing – Assistance Call
Rapid Red flashing – Emergency/Crash Call
Green flashing - Accepted Call / Intercom operating [Slow Flash]
Constant Green – Nurse Present Mode

Audio gain control: Controls the speech level output from the call point. This does not effect the volume from the speaker in the call point.

IR Receiver: Typically, the unit will cover a room 6m x 6m. **Important: See Page 17.**

Installation: Flush mount using standard 'double size' electrical backbox or surface mount using BB1

Size & Weights: 145 x 85 x 25 mm 125g

www.sensorium.co.uk

L762 Audio Call/Display Unit.

The L762 Call/Display Unit provides all the combined features of the L752 Audio call point and L758 Audio LCD display. It features seven levels of call, hands free two way intercom, integral infra red receiver, integral LCD display, audio page facility, audible call re-assurance, re-assurance LED and 'another call' sounder. The trigger socket will accept pear leads, pressure mats, portable radio triggers and a host of other triggering devices. The unit flush mounts into a standard double gang backbox or may be surface mounted using the Intercall **BB1**. All X1 to X5 remote trigger inputs feature a secondary description facility where details for the remote device may be programmed. For example "En-Suite" or "Ceiling Pull Switch" may be allocated to these inputs. Please refer to the information contained on page 17 for more information regarding installation and performance of the Infra Red receiver.

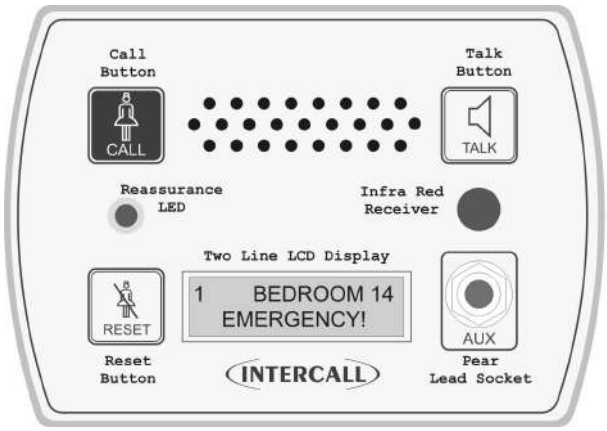

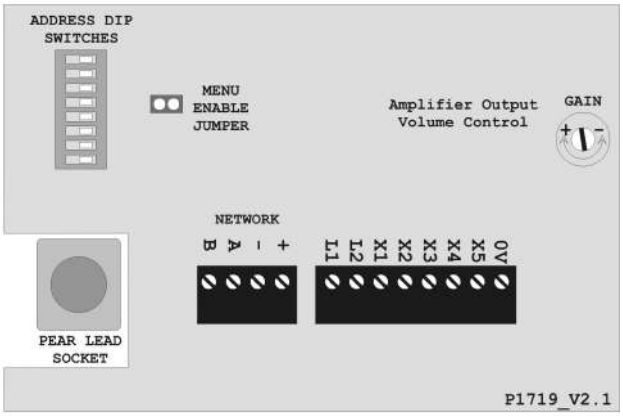

Network Terminals: Connect to the Intercall 700 4 wire Network. [A,B,+, –] OBSERVE POLARITY

X1 Terminal: Programmable Input No 1 – *Factory Default is Standard Call, System Text 1*
X2 Terminal: Programmable Input No 2 – *Factory Default is Emergency Call, System Text 1*
X3 Terminal: Programmable Input No 3 – *Factory Default is Nurse Present/Reset Toggle.*
X4 Terminal: Programmable Input No 4 – *Factory Default is Emergency Call, System Text 2*
X5 Terminal: Programmable Input No 5 – *Factory Default is Nurse Present Only.*

L1 Terminal: Red LED Output for Ceiling pull switch LED. *Max load 12v 10mA*
L2 Terminal: Green LED Output for Slave Reset Point LED. *Max load 12v 10mA*
0V Terminal: Additional Network negative common terminal for auxiliary connections.

Address Switches: Set to unique setting between 1 and 215.

Re-assurance LED: Slow Red flashing – Standard Call
Faster Red flashing – Priority Call
Slow Red/Green flashing – Assistance Call
Rapid Red flashing – Emergency/Crash Call
Green flashing - Accepted Call – Staff on their way / Paging from Call Point
Constant Green – Nurse Present Mode

Audio gain control: Controls the speech level output from the call point. This does not effect the volume from the speaker in the call point.

IR Receiver: Typically, the unit will cover a room 6m x 6m. **Important: See Page 17.**

Integral Menus: Extensive menu structure for Call Point & Display configuration. See Page 58

Installation: Flush mount using standard 'double size' electrical backbox or surface mount using BB1

Size & Weights: 160 x 115 x 25 mm 135g

www.sensorium.co.uk

L642 Addressable Room Controller.

The L642 Room Controller provides an address for Slave Call and Reset Points within a room. Generally located above the Room door, it combines the function of the Call Point and Overdoor Light. The 642 is fitted with Red and Green LED's which indicate the status if the unit. The unit is fully addressable and connects to the Network and the Slave Call and Slave Reset Points within the Room. The unit is available with an integral sounder.

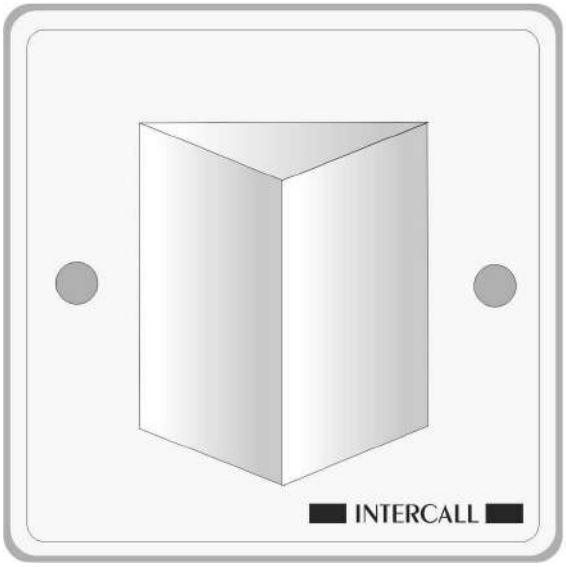

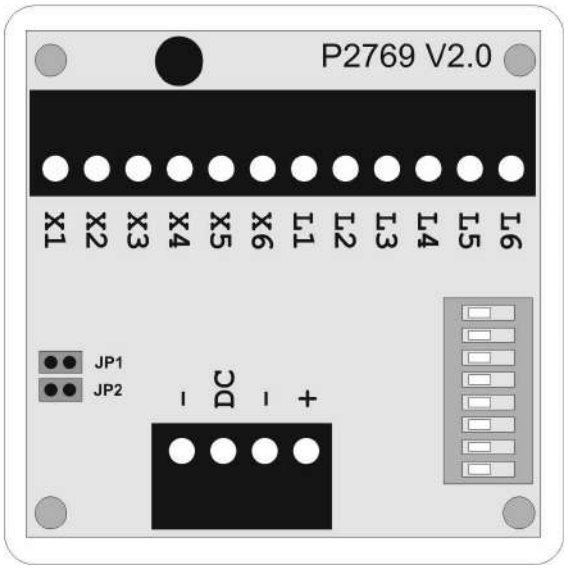

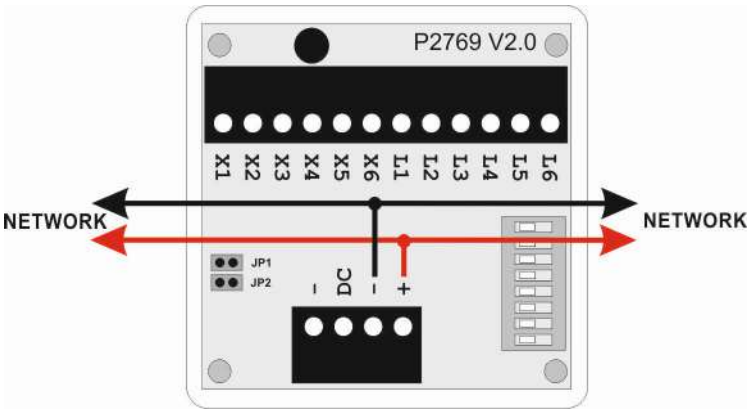

Network Terminals:	Connect to the Intercall 600 or 700 (2 wire) Network**.** [+, –] **OBSERVE POLARITY**
DC Terminal:	12V DC Output derived from Network Voltage. ***Caution:*** *Max Load 5mA*.
X1 Terminal:	Standard Patient Call Input
X2 Terminal:	Emergency Call Input
X3 Terminal:	Nurse Present/Reset Toggle Input [Does not Reset X4]
X4 Terminal:	Attack/Code Blue input [This must be reset at the display]
X5 Terminal:	Assistance Call Input.
X6 Terminal:	Isolate Call Input.
L1 Terminal:	Standard Patient Call LED Output
L2 Terminal:	Emergency LED Output
L3 Terminal:	Nurse Present LED Output
L4 Terminal:	Attack/Code Blue LED Output
L5 Terminal:	Assistance LED Output.
L6 Terminal:	Isolate LED Output.
Jumper JP1:	**Alternative Light Patterns -** When fitted, the unit will use alternative light pattern.
Jumper JP2:	**Remote Reset Enable -** When fitted, the unit will reset when accepted at the display.
Sounder:	When fitted, mimics the sound of the call point.
Installation:	Flush or surface mount in standard 'single size' electrical backbox. (See page 16). Connects to system two core and optional ceiling pull switch and Slave Points.
Size & Weights:	80 x 80 x 40 mm, 70g

www.sensorium.co.uk

L642 Addressable Room Controller Connections.

The diagram below shows a typical single room installation with the L642 Room Controller connected to a Ceiling Pull Switch, together with Slave Call Point and Slave Reset Point.

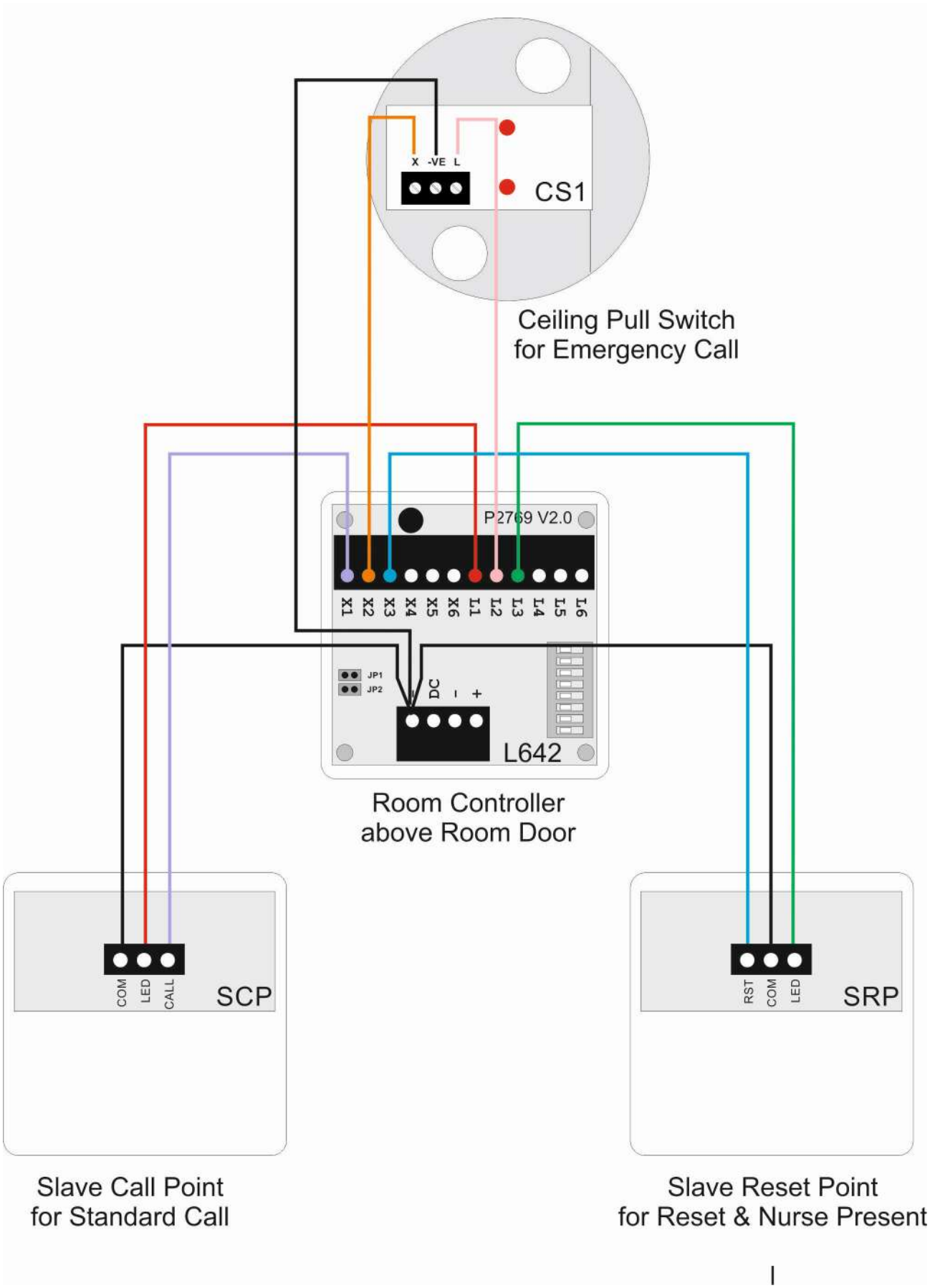

www.sensorium.co.uk

CMS-IP Call Management Software for L7700 IP Power Supply

The CMS-IP software is used in conjunction with the **L7700 IP Controller** and displays real time information from the call system. The CMS IP software nterfaces directly with the TCP/IP LAN (Local Area Network) and may be installed on several computers simultaneously on the same LAN. CMS-IP does not require any complicated Com port setup or Importing of Room Text Data or Users as the information is automatically received over the Network. All of the events are stored inside the L7700 IP Controller, so the PC does not even need to be switched on in order to record system activity. With the use of an additional IP L7744 interface, free text messages may be sent to Message Pagers and DECT telephone handsets.

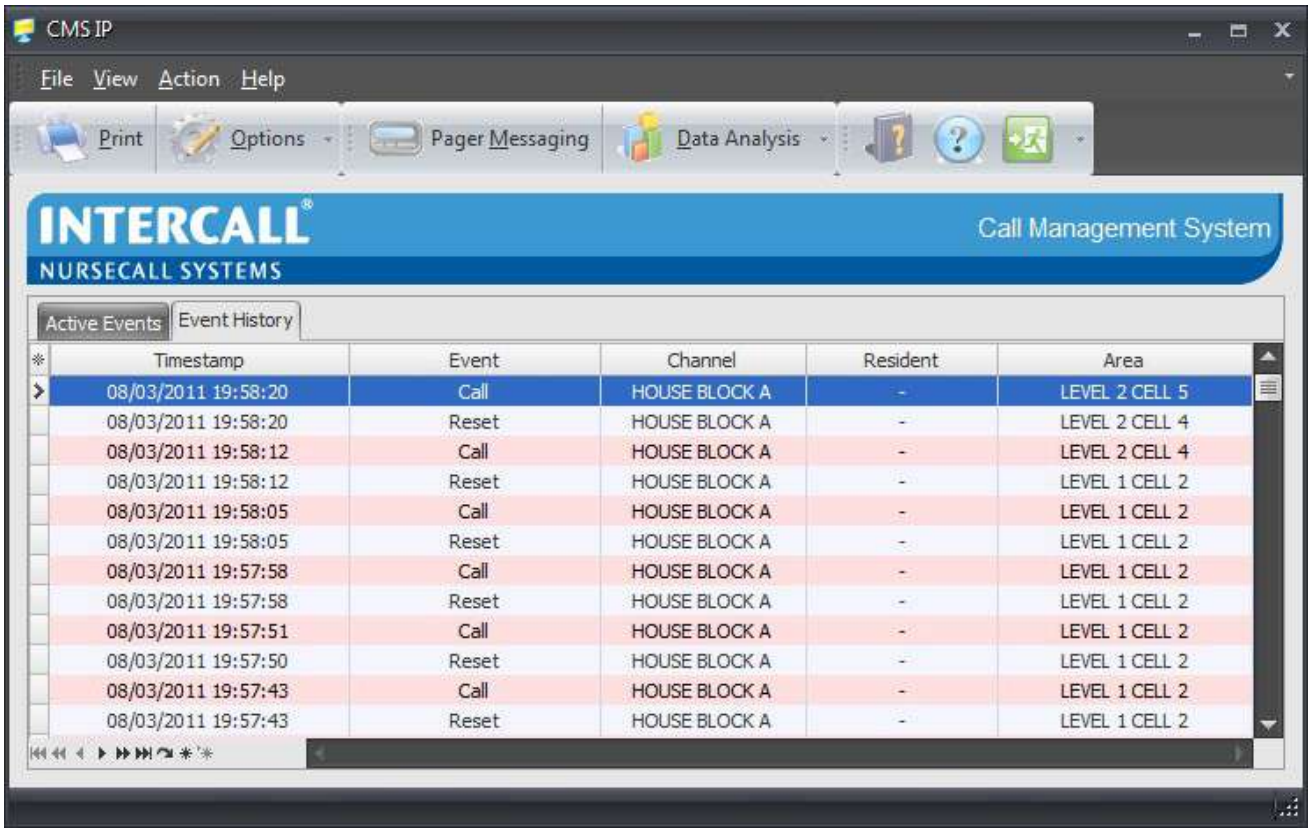

Timestamp	Event	Channel	Resident	Area
08/03/2011 19:58:20	Call	HOUSE BLOCK A	-	LEVEL 2 CELL 5
08/03/2011 19:58:20	Reset	HOUSE BLOCK A	-	LEVEL 2 CELL 4
08/03/2011 19:58:12	Call	HOUSE BLOCK A	-	LEVEL 2 CELL 4
08/03/2011 19:58:12	Reset	HOUSE BLOCK A	-	LEVEL 1 CELL 2
08/03/2011 19:58:05	Call	HOUSE BLOCK A	-	LEVEL 1 CELL 2
08/03/2011 19:58:05	Reset	HOUSE BLOCK A	-	LEVEL 1 CELL 2
08/03/2011 19:57:58	Call	HOUSE BLOCK A	-	LEVEL 1 CELL 2
08/03/2011 19:57:58	Reset	HOUSE BLOCK A	-	LEVEL 1 CELL 2
08/03/2011 19:57:51	Call	HOUSE BLOCK A	-	LEVEL 1 CELL 2
08/03/2011 19:57:50	Reset	HOUSE BLOCK A	-	LEVEL 1 CELL 2
08/03/2011 19:57:43	Call	HOUSE BLOCK A	-	LEVEL 1 CELL 2
08/03/2011 19:57:43	Reset	HOUSE BLOCK A	-	LEVEL 1 CELL 2

The CMS IP software connects to the same Local Area Network as the L7700 **L7700 IP Controller**. With the use of an additional IP L7744 interface, free text messages may be sent to Message Pagers and DECT telephone handsets. A typical installation is shown below. The software is licensed for use on any number of computers on the same Local Area Network.

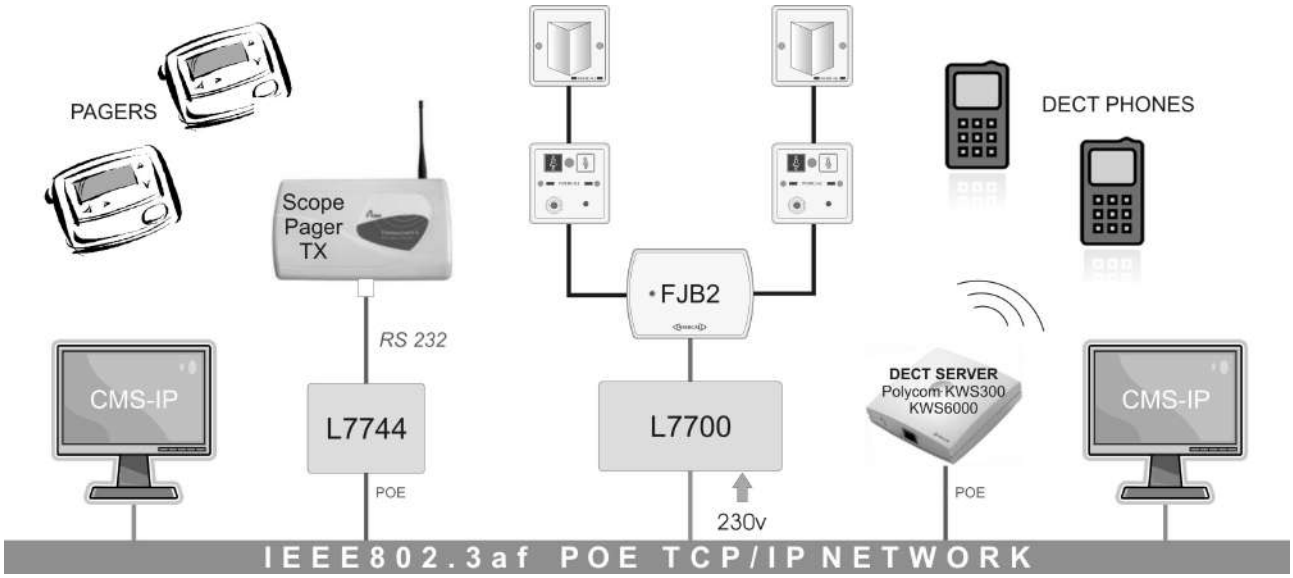

www.sensorium.co.uk

LIMKIT USB System Configuration Kit for L717.

The New **USB** Programming Module is used on the legacy power supplies to program the software configurable devices such as the **ST** Triggers & **TIR4** Pendants and **L747** together with the **Room Text, User ID** and **Auxiliary Input Text** within the power supply units. The kit is supplied with connection leads which are required to program different devices.

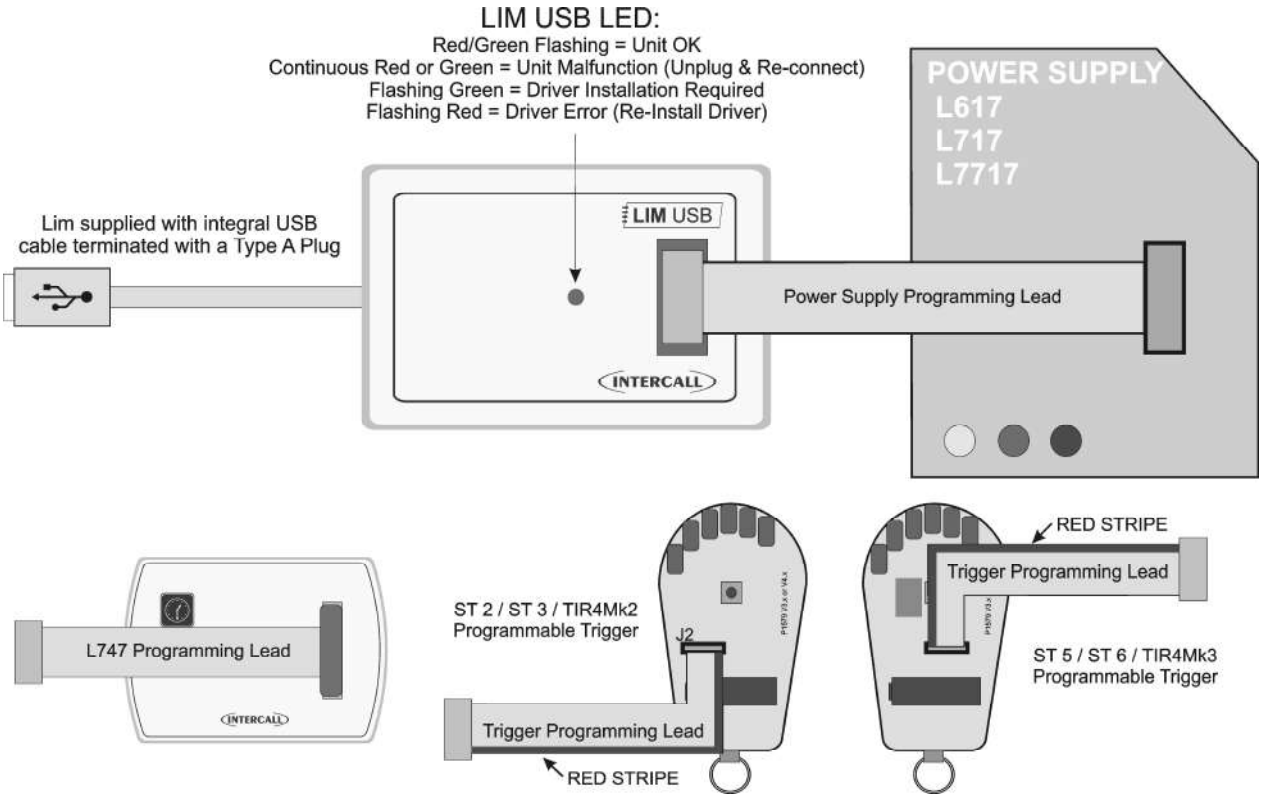

LIMPROG *USB* Configuration software.

The LIMPROG Configuration Software is used in conjunction with the LIM USB Programming Module to program the text within the system and **scan the system network to discover devices**. All the text used by the system is stored in the power supply & can be downloaded to the system by either the software or by using the *download* button on the power supply. Once downloaded, the information is also stored in the displays and L747 Universal Interface.

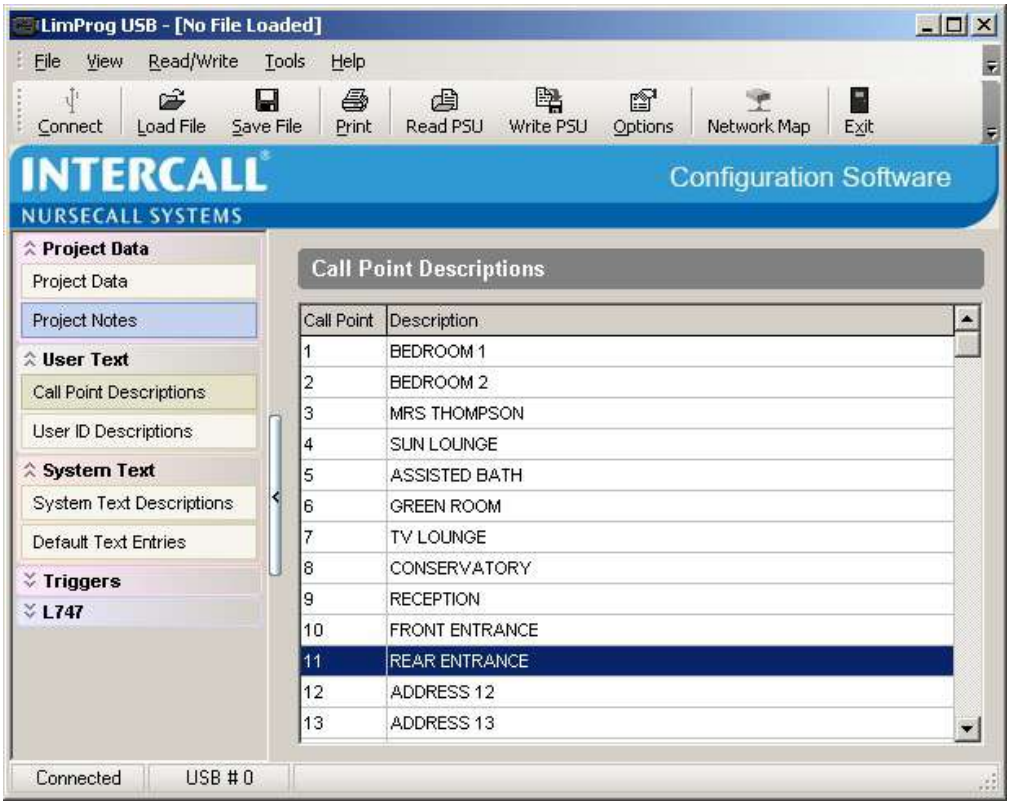

www.sensorium.co.uk

SCP Slave Call Point.

Slave call points are used to cover several beds or areas in one room or ward where each individual point does not required a separate identity on the call system. Units must be wired back to a standard call point to provide the reset and to generate the call address. Slave Call Points can only generate 'standard patient call' from either the call button or pear lead socket. Note the unit does not have pear lead removal detection.

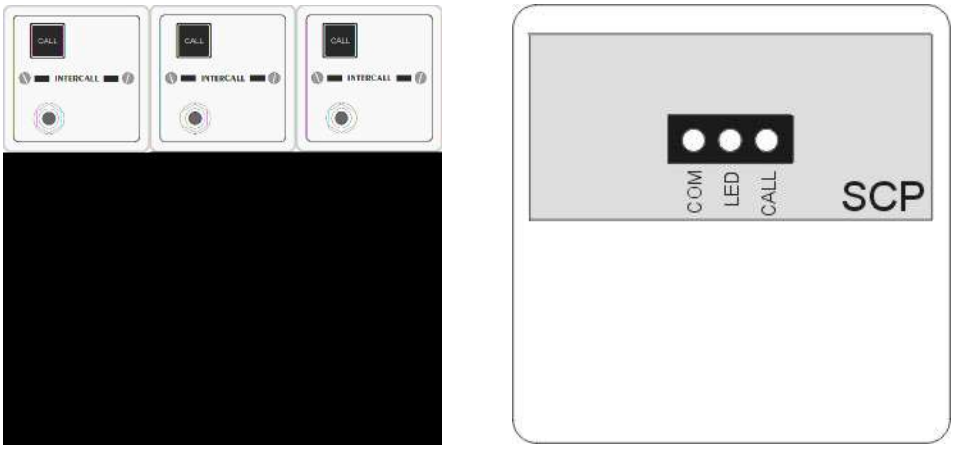

Above: Front panel and pcb detail of the SCP Slave Call Point

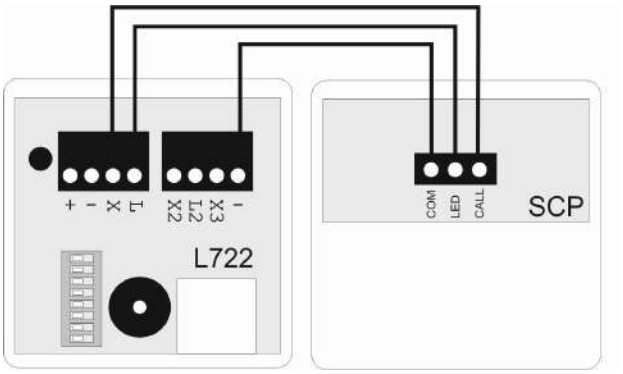

SCP Connects to call point 'X' and '-' terminals (L722 call point shown above)

Max 3 SCP may be used to trigger a single call point

Pear lead Socket: Intercall standard socket that will accept any normally open contact.
This socket can accept input from pear leads, pressure mats, radio triggers etc.
Note the unit does not have pear lead removal detection.

LED: Red Led mimics the Red LED of the Call Point

Installation: Flush or surface mount in standard 'single size' electrical backbox.

Size & Weights: 80 x 80 x 40 mm, 60g

www.sensorium.co.uk

SRP Slave Reset / Present Point.

Slave Reset / Present Points are normally located by the door of a bedroom to enable staff to reset the call point and to register as staff present away from the patient call point. The unit is used in conjunction with a Call Point as shown below.

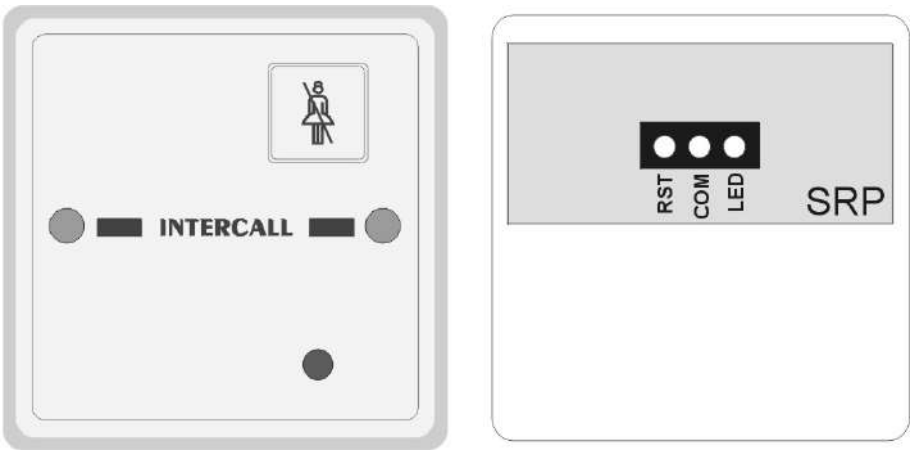

Above: Front panel and pcb detail of the SRP Slave Reset/Present Point

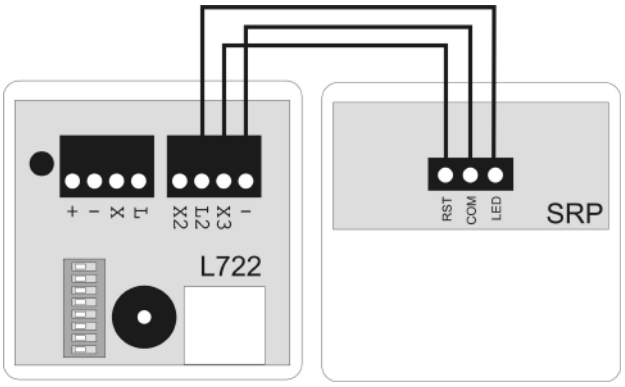

Above: SRP Connects to L722 (Mk2) Call point using X2 and L2 terminals

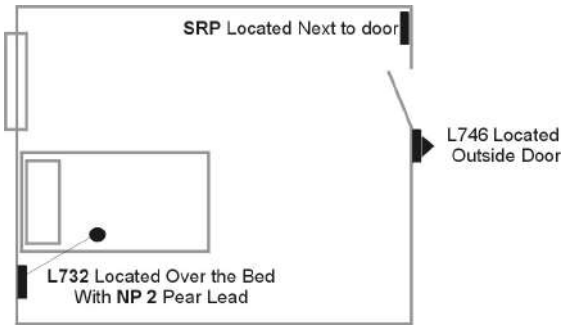

Above: Typical Room Layout showing L732 Call Point, SRP Remote/Preset Unit and L746 Overdoor Light.

Reset Button:	**Performs same functions as reset button on L732 but in remote location.**
LED:	Green Led mimics the green LED of the Call Point
Installation:	Flush or surface mount in standard 'single size' electrical backbox.
Size & Weights:	80 x 80 x 40 mm, 60g

SCP-IR Slave Call Point with Infra Red Receiver.

The SCP-IR combines the functions of a Slave Call Point and a L730 Slave Infra Red Receiver in a single unit. The units are used to cover several beds or areas in one room or ward where each individual point does not required a separate identity on the call system. Units must be wired back to a standard call point to provide the reset and to generate the call address. Slave Call Points can only generate a single call type (normally standard patient call) from the call button, infra red receiver or pear lead socket. Note the unit does not have pear lead removal detection.

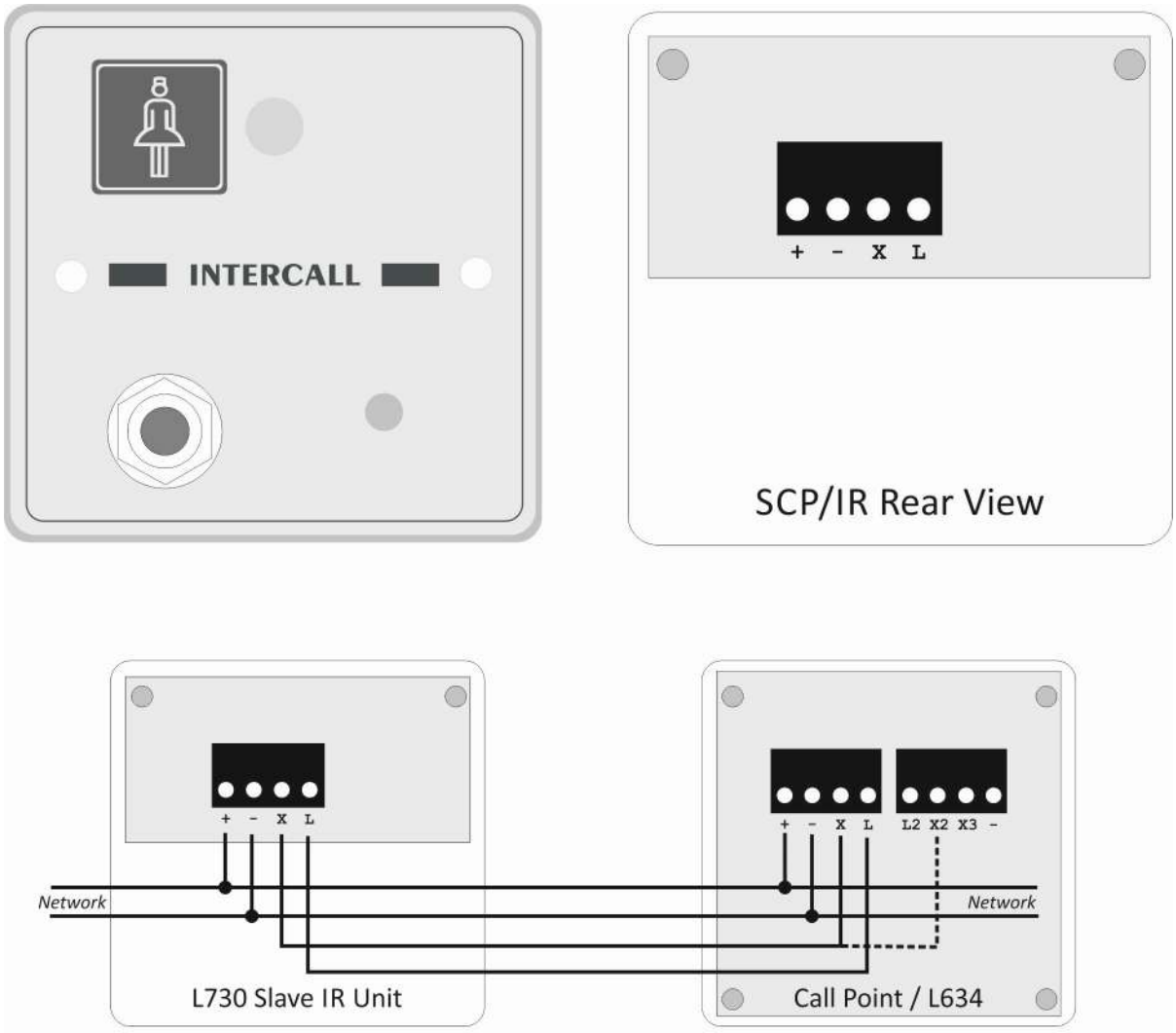

Connection to single call point to generate single level of call
(Connect to X2 terminal of L622 to generate Emergency)

Network Terminals:	Connect to the Intercall Network**.** [+, –] OBSERVE POLARITY !
X Terminal:	Open Collector Output to connect to call point.
L Terminal:	LED Input to light LED on L730.
Installation:	Flush or surface mount in standard 'single size' electrical backbox. (See page 16)
IR Receiver:	Typically, the unit will cover a room 6m x 6m. **Important: See Page 17**
Size & Weights:	80 x 80 x 40 mm, 70g

www.sensorium.co.uk

SCPE Slave Call & Emergency Point.

Slave Call and Emergency Points are used to cover several beds or areas in one room or ward where each individual point does not require a separate identity on the call system. Units must be wired back to a standard call point to provide the reset and to generate the address. Slave Call Points can generate 'standard patient call' from either the call button or pear lead socket and 'Emergency Call' from the Emergency button. Note the unit does not have pear lead removal detection.

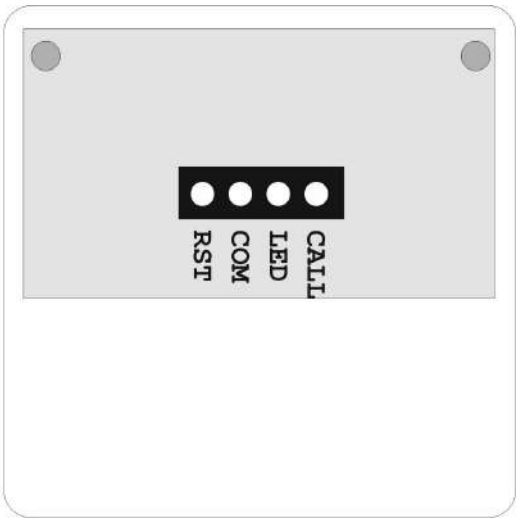

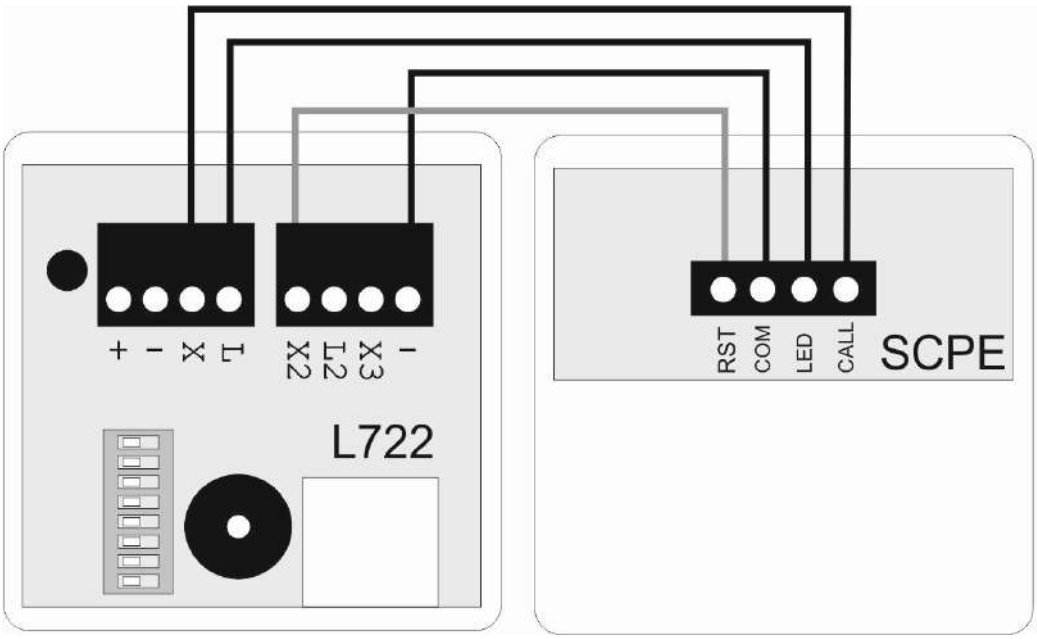

Pear lead Socket:	Intercall standard socket that will accept any normally open contact. *This socket can accept input from pear leads, pressure mats, radio triggers etc.* Note the unit does not have pear lead removal detection.
LED:	Red Led mimics the Red LED of the Call Point
Installation:	Flush or surface mount in standard 'single size' electrical backbox.
Size & Weights:	80 x 80 x 40 mm, 60g

www.sensorium.co.uk

L730 Slave Infra Red Receiver.

Slave Infra Red Receivers are used to provide infra red reception cover in additional areas in one room or ward where each individual receiver does not required a separate identity on the call system. Units must be wired back to a standard call point to provide the reset and to generate the call address. The L730 can be configured to generate a 'standard patient call' and/or a 'Staff Emergency Call' depending on the configuration.

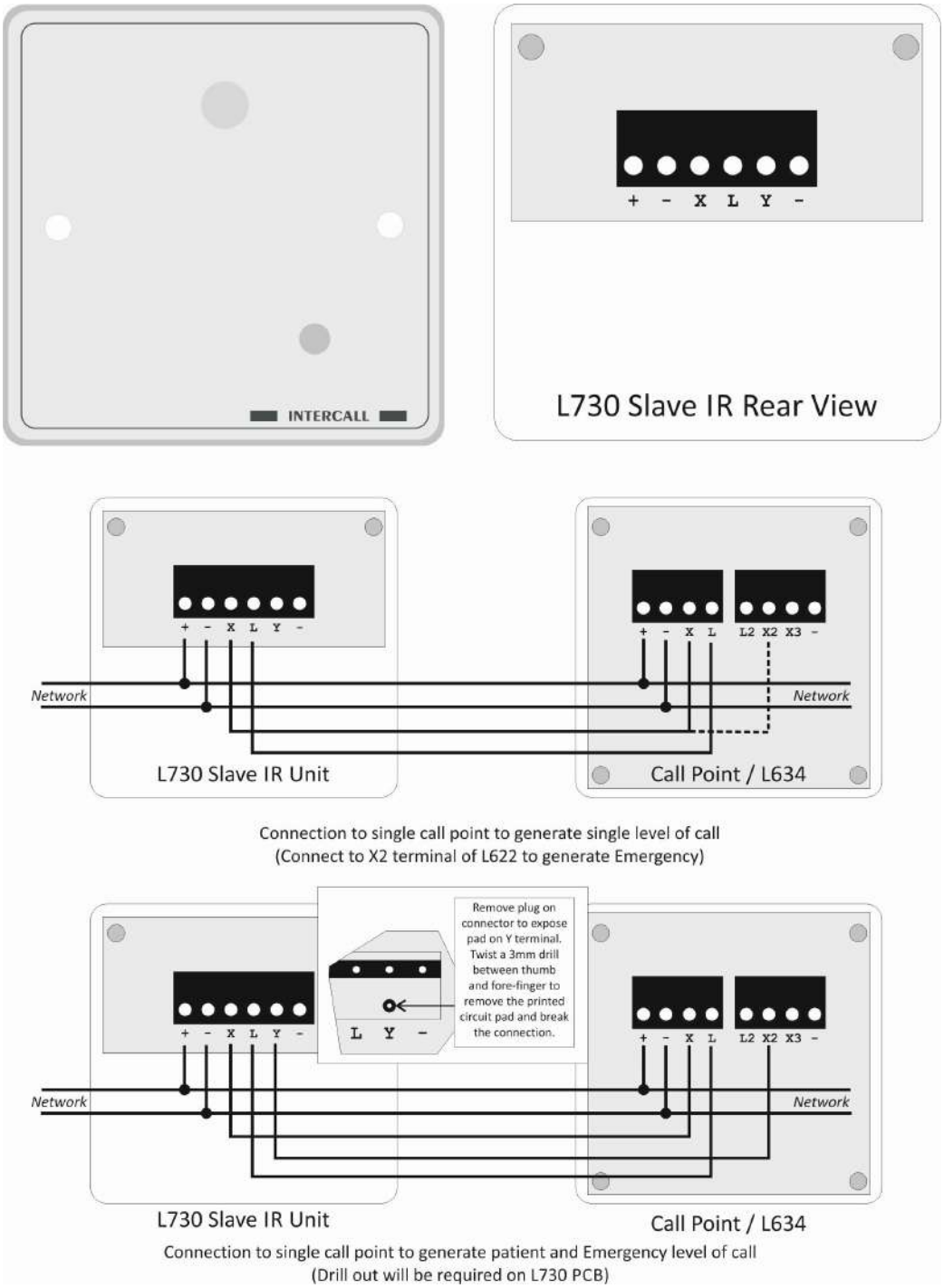

Network Terminals: Connect to the Intercall Network**.** [+, –] OBSERVE POLARITY !

X Terminal: Open Collector Output for (Call/Assist/Priority etc) Infra Red Signal.
L Terminal: LED Input to light LED on L730.
Y Terminal: Open Collector Output for (Emergency/Attack etc) Infra Red Signal.
- Terminal: Additional Network Negative terminal provided.

X and Y Terminals are connected together by default, use drill out to provide individual outputs.

Installation: Flush or surface mount in standard 'single size' electrical backbox. (See page 16)

Size & Weights: 80 x 80 x 40 mm, 70g

www.sensorium.co.uk

CS1 Ceiling Pull Switch.

Ceiling Pull Switches are used in bathrooms, fitted to the ceiling over the toilet and bath to allow a call to be generated from these areas. They are fitted with 3 metre length of cord terminated with an easy to operate 'G' style pull and twin re-assurance indicators.

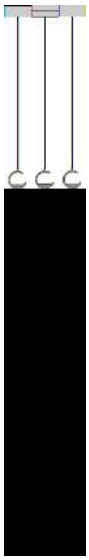

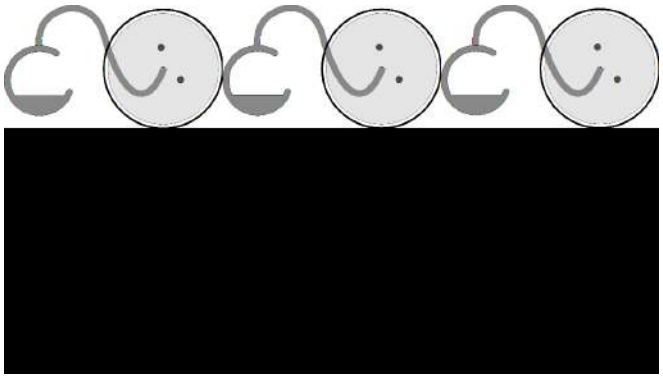

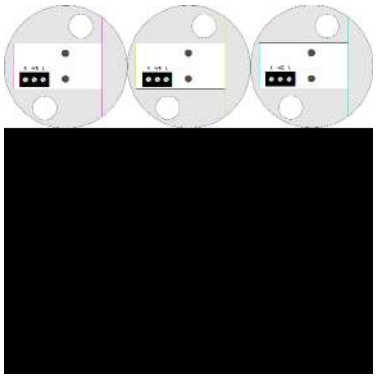

Above: Front view and pcb detail with the cover removed

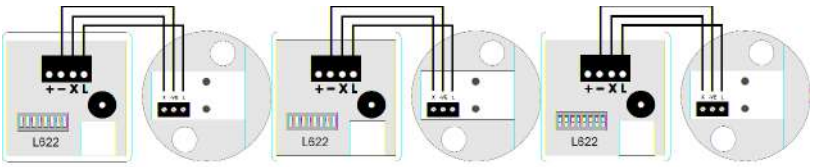

CS1 Connects to call point 'X' '-ve' and 'L' terminals (L622 call point shown above)

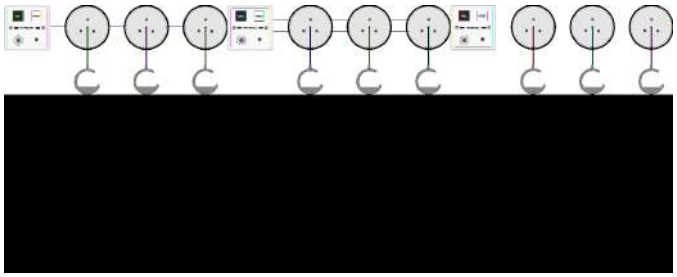

Very Important: A MAXIMUM OF 3 CS1 UNITS MAY BE CONNECTED TO ONE CALL POINT

Installation:	Surface mount in self contained enclosure.
Size & Weights:	Diameter 80mm x depth 30mm weight 50g
Important:	You must not mix old style Red LED and new style Clear LED Ceiling Pull switches on the same call point.

www.sensorium.co.uk

PIR1 PIR Detector used to monitor beds.

The PIR1 unit is a network compatible unit which can trigger a call point when a resident is out of bed. The unit is often used with an isolating switch located outside the room to remotely enable and disable the device. The unit is also available with a delay function to prevent unnecessary calls and for dementia care systems. please contact the technical department for more information. The unit can be used as a simple PIR for security and access control purposes or with the use of a mask *(shown fitted below)* to monitor a bed. The location of the unit is important and this id detailed below.

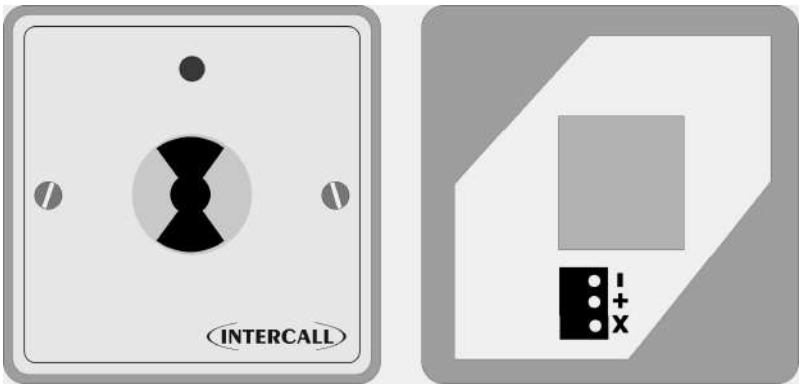

Above: Front view and pcb connection detail
MASKS ARE FREE ON REQUEST BUT MUST BE ORDERED SEPARATELY

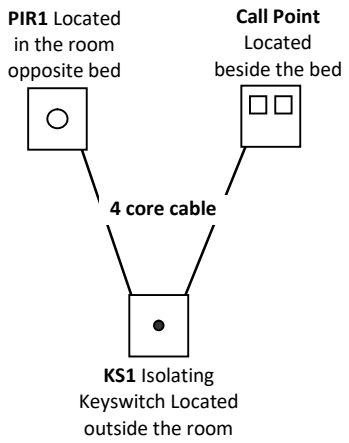

Typical installation example for bed montoring applications

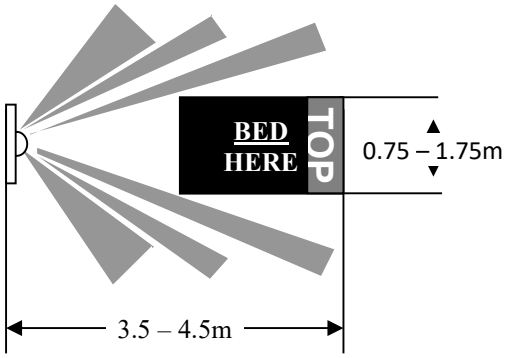

View from above. *Location of the PIR1 is very important for effective operation.*

PIR1 Connects to call point 'X' and network '+' and '-'

Very Important: LOCATION OF THE PIR1 FOR BED MONIORING

- **Mount the PIR 1 at a height of 2m from floor level.**
- **The bed must be minimum 0.75m wide and no greater than 1.75m.**
- **The pillow end of the bed must be furthest away from the PIR1.**
- **The headboard must be between 3.5 and 4.5 metres from the PIR1.**

ENSURE UNITS ARE ISOLATED AT POWER UP

Connections: PIR1 Connects to call point 'X' and network '+' and '-'

Warm up period: As the PIR1 will continually call for 10 minutes after power up – ensure the units are isolated at time of system power up.

Installation: Surface mount in standard single gang backbox.

Size & Weights: 80mm x 80mm x depth 25mm weight 50g

www.sensorium.co.uk

L672 Dementia Controller.

The Intercall Dementia Care Unit has specifically been developed to provide non-intrusive help for residents who may need assistance when they are confused. By controlling additional low voltage lighting in the bedroom and en suite WC areas, the L672 helps guide a confused resident to the bathroom and back to bed. If at any time the resident's movements do not conform to a pre-programmed 'normal' behavior pattern, an alarm is automatically raised via the Intercall system. In addition, the unit can be configured to monitor bedroom and patio doors to alert staff immediately. Generally located outside the bedroom, the L672 Dementia Care Unit gives constant visual indication of the status indication of movement in the room and/or operation of the door(s). The LCD display makes it easy to select the desired movement profile for the resident and shows the cause of any alarm activation. See page 62 for information on the L672 Configuration.

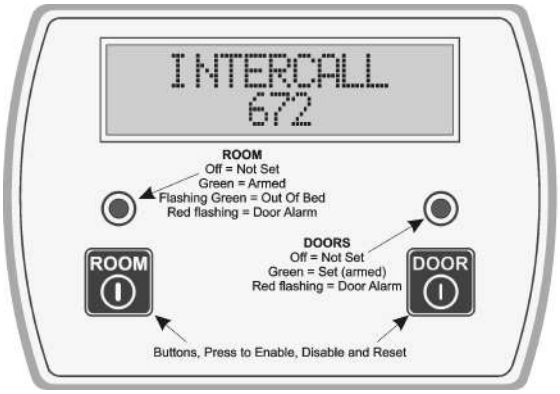

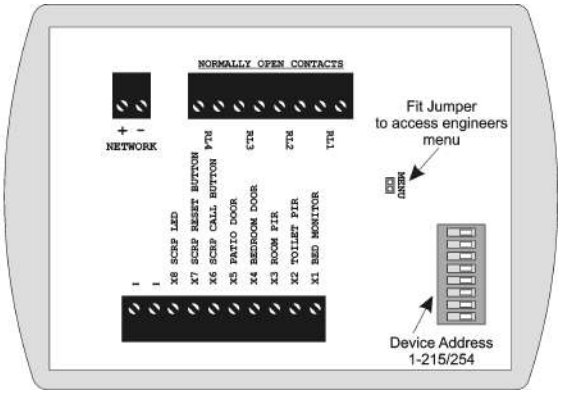

Typical System Installation

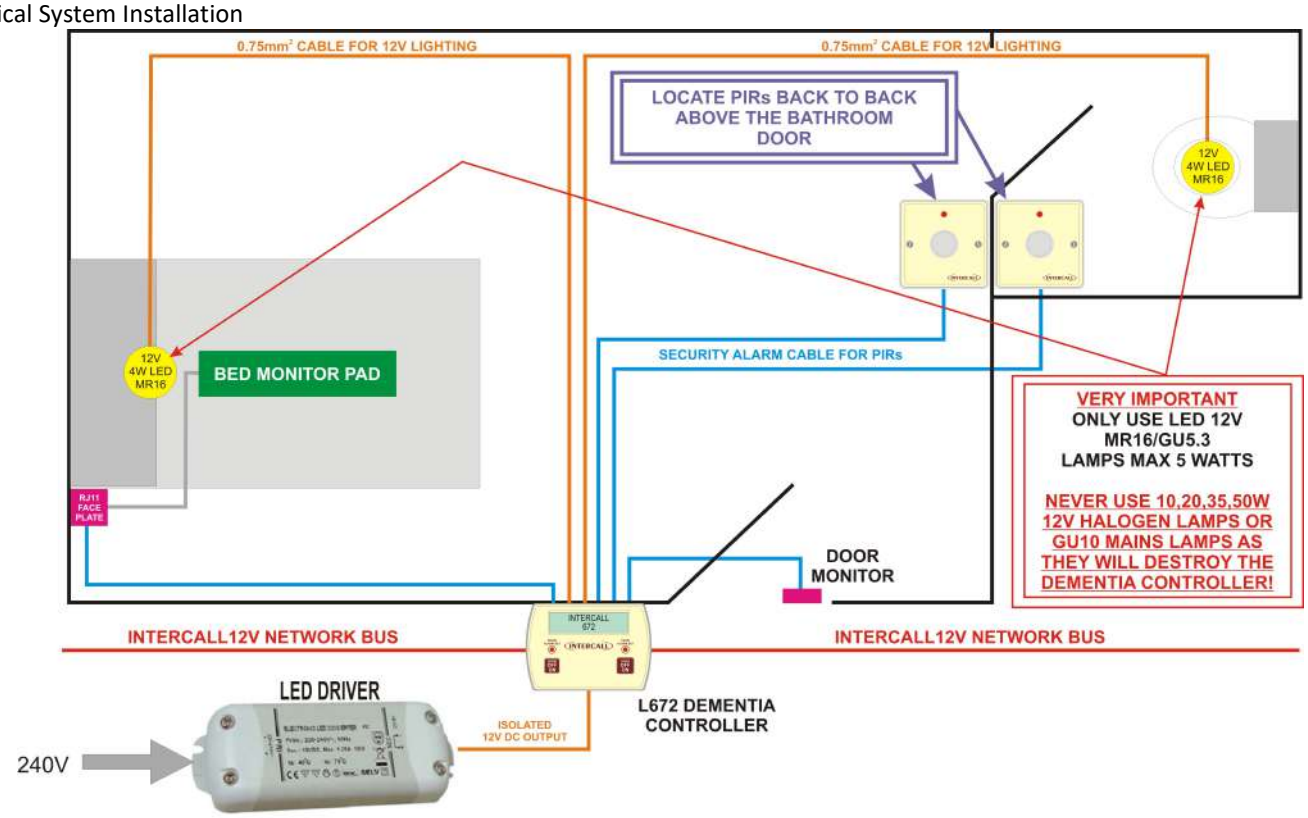

Network:	Connects to Intercall Network + and -
Address:	DIP Switch Device Network Address (1-215/254)
Inputs (0V Common):	Bed Monitor, Room PIR, Ensuite PIR, Door Contact(s) & Slave Call Point
Outputs:	N/O Low Voltage Relays: Bed Light, Room Light, Aux Alarm, Light Over-ride.
Installation:	Surface mount in BB1 backbox , flush monitor .
Size & Weights:	160 x 115 x 20 mm, 70g

www.sensorium.co.uk

L672 Dementia Controller Connections.

The Intercall Dementia Controller requires simple closing contact inputs for the Bed occupancy mat and 'open collector' inputs from the PIR1 units. The volt free relay outputs are used to control the 12V LED Lights. The unit is provided with Auxiliary contacts for alarm output and device enabled.

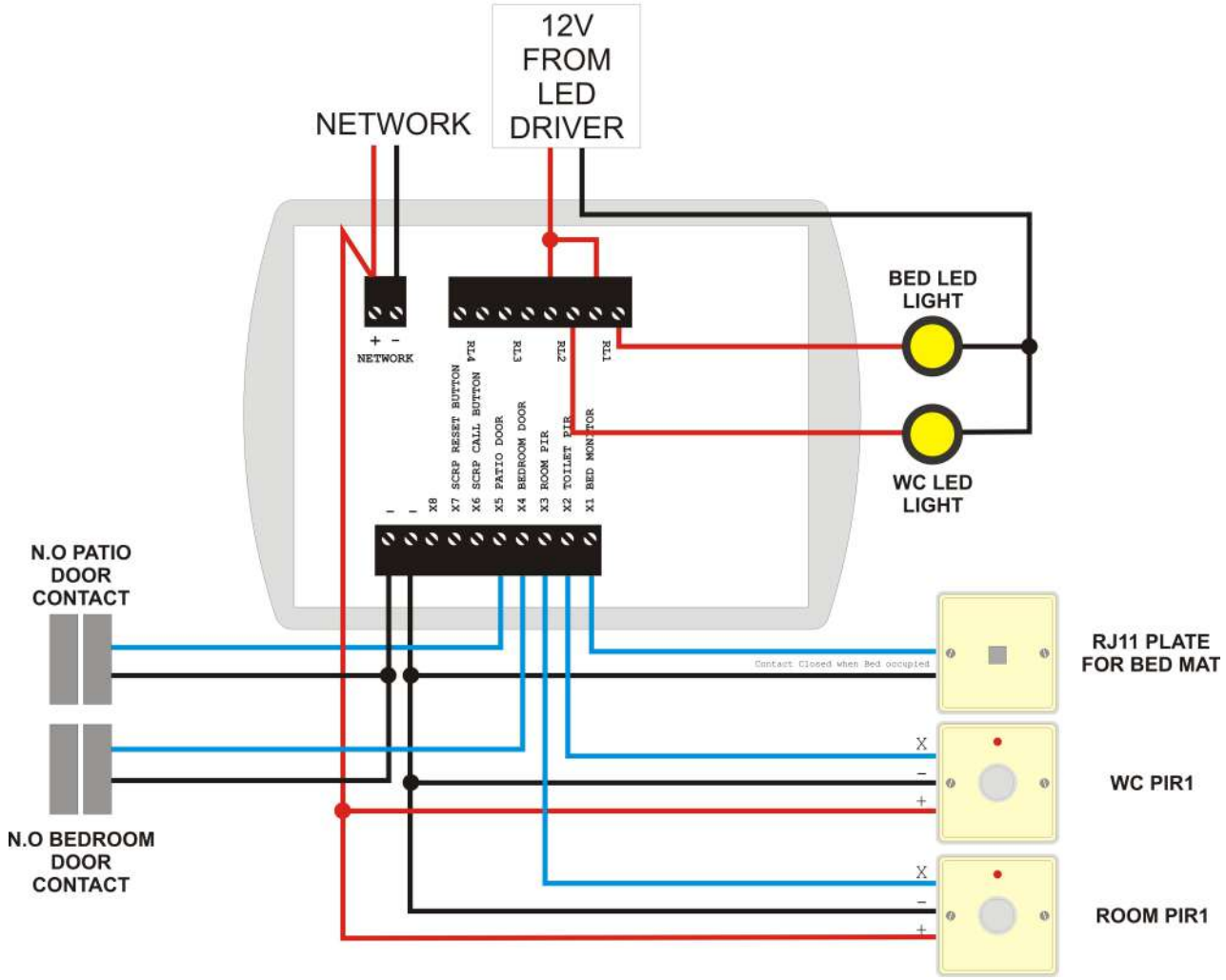

Connections:

Network:	Connects to Intercall Network + and -
Inputs:	All Inputs referenced to 0V
X1 Bed Monitor:	To Bed Monitor Mat (Via RJ11 Faceplate) Short to 0V when bed occupied.
X2 Bed PIR:	To Toilet PIR1 X Terminal
X3 Room PIR:	To Room PIR1 X Terminal
X4 Bedroom Door:	To Bedroom Door Contacts (Closed when door open)
X5 Patio Door:	To Patio Door Contacts (Closed when door open)
X6 Call Button:	To Slave Call Point Call Button
X7 Reset Button:	To Slave Reset Button Button
X8 LED Output:	To Slave Call Point LED terminal.
Outputs:	Normally Open Volt Free Contacts MAX 24V 500mA
RL1:	N/O Relay for Bedroom LED Light
RL2:	N/O Relay for Toilet WC LED Light
RL3:	N/O Relay for Aux Alarm Output (Closed when unit is in alarm condition)
RL4:	N/O Relay for Unit Armed (Closed when unit is armed)

VERY IMPORTANT: RELAY OUTPUTS ARE FOR LOW VOLTAGE ONLY MAX 24V 500mA
NEVER CONNECT THESE RELAYS TO MAINS VOLTAGE.

www.sensorium.co.uk

Intercall 600 & Intercall 700 Configuration Guide.

These pages are intended to give the reader an overview of the possibilities using Intercall 600 and Intercall 700 systems for specific configurations. Detailed information on the individual components can be found from page 20.

Below we list the parameters that can be configured with the Intercall 600 & 700

- Changing the call point text messages.
- Changing the text which is shown when no calls are active.
- Display Alarm Tone volume settings.
- Reduced Alarm Tone from displays at night time.
- Changing the time before a standard call becomes an emergency and/or disabling this function completely.
- Changing the time before a standard call becomes a priority call and/or disabling this function completely.*
- Changing the time before an accepted call returns to the calling state (Mute Timer)
- Enabling and disabling the nurse present auto-expiry timer. (Mk2 Products only)
- Disabling the 'Call Follower' sounder on the call points.
- Disabling the nurse present feature on the call points.
- Making specific call points generate a different alarm sound from the displays.
- Disabling the Accept Call function on the displays
- Enabling LCD display units to show faulty or missing network devices.*
- Enabling LCD display units to show resident name as well as call location.*
- Making the LCD displays show only specific call points (Zoning).
- Supervisors Display Showing all calls but only sounding for crash calls.

**Intercall 700 only*

Programming the text messages

The first thing we will need to do is to set the switches on the call points so we can give each unit a text identity. (This is what will be displayed when the call point is active e.g. 'BEDROOM 14') .Before we can begin we need to ask the following questions:

- Will the system be zoned? (Operated in areas e.g. wings or floors)
- Will we need more than one call point with the same text (E.g. rooms with more than one bed).
- Will we need special text that is not in the factory default. (E.g. names or wards etc)

If the answer to all of the above is **no** then we can continue with the factory configuration described below. If the answer to any of the above is yes, please read the paragraph 'Custom configuration'.

Factory Text Configuration.

The factory text is programmed into the power supply and displays, is a simple **Address Number** for each device (Eg Address 1, Address 2 etc) Simply set the switches on the call point to the desired setting. **NOTE: All call points must have a unique switch setting.**

Custom Text Configuration

If a system is to be zoned or where repeated or special text is required, the power supply will need to be programmed. The L717 text can be customised using the LIMKIT and the L7700 is programmed using the embedded website.

Zoning Text

If a system is to be zoned we must disregard the text and concentrate on the call point address as the text can be programmed at a later date. See page 58 for more information and examples of zoning.

Repeated text.

If a system requires more than one call point to have the same text identity (e.g. two beds in one room) we can set the call point to an address with a text identity we do not require and re-program the text.

Special text.

If a system requires special text we address the first call point 01, the second 02 etc and completely re-program the entire text.

www.sensorium.co.uk

Changing the text shown when no call is active.
You can edit this text from the embedded website of the L7700 Power Supply or Using the LIMPROG Programming software on the L717. This allows your company name and a call out telephone number to be shown if you wish. You have two lines of 16 characters which may be used. The factory default is 'Intercall 600' or 'Intercall 700' depending on the system.

LCD Display Alarm Volume Levels.
Every LCD display is fitted with a 'Day' and 'Night' alarm volume setting. The volume of each LCD display may be set up independently depending on the local conditions and background noise. See page 28 for more detailed information.

Reducing the alarm volume at night.
The alarm volume from the LCD display may be reduced at night time if required. This can be manually switched using the L717 or manually and automatically switched at scheduled times using the L7700 Power Supply.

System Features Configuration.
The System configuration is controlled by the L7700 / L717 Power Supply and is adjusted by means of a bank of DIL switches detailed on page 74 for the L717, or using the embedded website on the L7700.

They control the following features:

- Changing the time before a standard call becomes an emergency and/or disabling this function completely.
- Changing the time before an accepted call returns to the calling state (Mute Timer)
- Disabling the 'Call Follower' sounder on the call points.
- Disabling the reset button present/reset toggle on the call points.
- Enabling and disabling the nurse present auto-expiry timer. (Selected products only)
- Enabling LCD display units to show faulty or missing network devices.
- Enabling LCD display units to show resident name as well as call location.
- Changing the time before a standard call becomes a priority call and/or disabling this function completely.

Page 74 details all possible switch settings and the user guide from page 4 onwards, describes the features operation.

Display Features Configuration.
The Display features configuration is controlled by menu driven settings in all LCD Display units. Access to the display menus is obtained by first pressing and holding down the 'Show Staff' button. While holding down the 'Show Staff' button, press and hold the 'Accept Call' button for 10 seconds. Please see the following pages for more information on the available display settings.

Displays can be configured to show only certain call points (Zoning) and/or certain call types ('Supervisor' displays where staff are to be alerted only for emergency calls) The Accept Calls feature can be disabled for corridor displays or on installations where this feature is not required. Displays can be set up to sound a different alarm tone for certain call points (Doors or drug cupboards etc) 'Master Displays' can be configured to show all activity on a zoned system but only sound for local calls. For more information on display configuration with zoning see page 58. More detailed information on the display configuration can be found in page 57 'display menus'.

We have chosen to show the zoning configuration by giving typical examples of zoning requirements that we have encountered using the Intercall system. Intercall 600 and 700 displays feature the zoning menu described in page 58 and the Intercall 700 zoning capabilities will be extended in the future.

www.sensorium.co.uk

L628 & L758 Display Menu Settings.

To access the display menus, ensure the menu enable jumper if fitted and press & hold the left display button and then the right button simultaneously for 10 seconds. The left button changes the option and the right button advances to the next menu setting. After the final setting, the right hand button will return the unit to normal operating mode.

Menu	Settings	Description
DISPLAY ADDRESS:	00 to 07 or 15	Sets the **Display Address** of the unit. When display address 1 or above is selected, and the unit is not in master mode, the menu will jump to 2ND TONE LO ADD.
ZONE A LOW ADD:	001 to 215	Select the Lowest call point address for zone switch position A. *This function is available only when the display is in master mode or set to Display Address 00.*
ZONE A HI ADD:	001 to 215	Select the Highest call point address for zone switch position A. *This function is available only when the display is in master mode or set to Display Address 00.*
ZONE B LOW ADD:	001 to 215	Select the Lowest call point address for zone switch position B. *This function is available only when the display is in master mode or set to Display Address 00.*
ZONE B HI ADD:	001 to 215	Select the Highest call point address for zone switch position B. *This function is available only when the display is in master mode or set to Display Address 00.*
ZONE C LOW ADD:	001 to 215	Select the Lowest call point address for zone switch position C. *This function is available only when the display is in master mode or set to Display Address 00.*
ZONE C HI ADD:	001 to 215	Select the Highest call point address for zone switch position C. *This function is available only when the display is in master mode or set to Display Address 00.*
2ND TONE LOW ADD:	OFF / 001 to 215	Select the Lowest call point address for the Second Tone alarm setting. *This range operates in addition to the zone windows above.*
2ND TONE LOW ADD:	OFF / 001 to 215	Select the Highest call point address for the Second Tone alarm setting. *This range operates in addition to the zone windows above.*
ACCEPT BUTTON:	ENABLED DISABLED	When enabled, allows the calls to be accepted at this display using the Accept button. When disabled, this function does not operate on this display only.
SHOW ALL CALLS:	ENABLED DISABLED	When enabled, this display will show all calls on the system but will only sound the audible alarm for calls in the current zone.
SOUND FOR:	ALL CALLS EMERGENCY CALLS ONLY	Select "Emergency Only" to allow Emergency and Attack calls only to generate the audible alarm from this display. All other call types will be shown but the audible alarm will not operate on this display.
EMERGENCY CALLS:	OWN ZONE ONLY ALL ZONES	Select "All Zones" to allow this display to show and sound for Emergency and Attack calls in all zones on the system. "Own Zone Only" will not show or sound for Emergencies or Attack calls from other zones.
ACCEPT ATTACK:	ENABLED DISABLED	When enabled, allows ATTACK calls to be accepted at this display using the Accept button. When disabled, this feature will be removed from this display only.
PRIORITY CALLS:	OWN ZONE ONLY ALL ZONES	Select "All Zones" to allow this display to show and sound for Priority calls in all zones on the system. "Own Zone Only" will not show or sound for Priority Calls from other zones.
NIGHT OVER-RIDE:	ENABLED DISABLED	Enabled = Emergency & Attack calls sound at the DAY alarm level when the system is in Night Mode. Disabled = Emergency & Attack sound at the NIGHT alarm level when the system is in Night Mode.
TEXT DOWNLOAD:	ENABLED DISABLED	Disable to prevent display from receiving the text download instruction sent from the power supply controller.
EMERGENCY TONE:	EMERG ONLY EMERG + PRIOR	This controls the call types which are sounded with the rapid 'beep..beep..beep' alarm tone. Select **Emergency Only** or **Emergency and Priority** call types**.**

www.sensorium.co.uk

L762 Call/Display - Display Menu Settings

Due to the large number of settings, the L762 menu is divided into two sections, this first section deals with the Display Menu only. Ensure the Menu Enable jumper is fitted to the rear of the unit and press and hold the '**Reset**' button then press and hold the '**Talk**' button, simultaneously for 10 seconds. To change the displayed option, press the '**Reset**' button. To move to the next item, press the '**Talk**' button. *While in the menu mode, the unit will not respond to system activity.*

Menu	Settings	Description
SELECT MENU	DISPLAY	Select DISPLAY to enter the display mode configuration, or select CALL POINT to enter the call point mode configuration.
MAX ADDRESS RANGE	1-215 1-254	If you are installing this display on a zoned legacy Intercall 700 system, set to 1-215 to avoid the zoning information being shown on the display.
DISPLAY ADDRESS	00 to 07	Sets the **Display Address** of the unit. *This Unit can only be configured as a slave display and must receive the zoning information from a master display set to the same display address.*
ZONE A LO: 001	001 to 215	Select the Lowest call point address for zone switch position A. *This function is available only when the display is set to Display Address 00.*
ZONE A HI: 215	001 to 215	Select the Highest call point address for zone switch position A. *This function is available only when the display is set to Display Address 00.*
ZONE B LO: 001	001 to 215	Select the Lowest call point address for zone switch position B. *This function is available only when the display is set to Display Address 00.*
ZONE B HI: 215	001 to 215	Select the Highest call point address for zone switch position B. *This function is available only when the display is set to Display Address 00.*
ZONE C LO: 001	001 to 215	Select the Lowest call point address for zone switch position C. *This function is available only when the display is set to Display Address 00.*
ZONE C HI: 215	001 to 215	Select the Highest call point address for zone switch position C. *This function is available only when the display is set to Display Address 00.*
2ND TONE LO: OFF	OFF / 001 to 215	Select the Lowest call point address for the Second Tone alarm setting. *This range operates in addition to the zone windows above.*
2ND TONE HI: OFF	OFF / 001 to 215	Select the Highest call point address for the Second Tone alarm setting. *This range operates in addition to the zone windows above.*
ACCEPT BUTTON:	ENABLED DISABLED	When enabled, allows the calls to be accepted at this display using the Accept button. When disabled, this function does not operate on this display only.
SHOW ALL CALLS:	ALL ZONES OWN ZONE ONLY	Select "All" to allow this display to show and sound for Emergency and Attack calls in all zones on the system. "Own Zone Only" will not show or sound for Emergencies or Attack calls on other zones.
SOUND FOR:	ALL CALLS EMERGENCY ONLY	Select "All" to allow this display to respond for all call levels, Select "Emergency Only" to ignore all calls apart from Emergency and Attack Calls.
EMERGENCY CALLS:	ALL ZONES OWN ZONE ONLY	Select "All Zones" to allow this display to show and sound for Emergency and Attack calls in all zones on the system. "Own Zone Only" will not show or sound for Emergencies or Attack calls from other zones.
ACCEPT ATTACK:	ENABLED DISABLED	When enabled, allows ATTACK calls to be accepted at this display using the Accept button. When disabled, this feature will be removed from this display only.

www.sensorium.co.uk

Menu	Settings	Description
PRIORITY CALLS:	ALL ZONES OWN ZONE ONLY	Select "All Zones" to allow this display to show and sound for Priority calls in all zones on the system. "Own Zone Only" will not show or sound for Priority Calls from other zones.
DISPLAY ACTIVE:	NURSE PRES ONLY NURSE PRES + RESET	Select when the LCD display is enabled. NURSE PRES ONLY will enable the display only when the unit is in Nurse Present Mode. Select NURSE PRES+RESET to enable the display when the unit is in either nurse presence or reset mode.
SHOW LOST UNITS:	ENABLE DISABLE	Select Enable to allow the display to show lost network devices, this will sound an alarm in the room whenever there is a fault on the system.
LOAD DEFAULT TXT	ENABLE DISABLE	Select Enable to load the default room and user text into the display (*Address* 1 to *Address 254* & *User ID 1* to *User ID 250*)
SHOW STAFF	ENABLE DISABLE	Select Enable to allow staff to be located when the reset button is held down. (Same function as show staff button on display)
NIGHT OVER-RIDE:	ENABLED DISABLED	Enabled = Emergency & Attack calls sound at the DAY alarm level when the system is in Night Mode. Disabled = Emergency & Attack sound at the NIGHT alarm level when the system is in Night Mode.
TEXT DOWNLOAD:	ENABLED DISABLED	Disable to prevent display from receiving the text download instruction sent from the power supply controller.
INTERCOM	ENABLED DISABLED	When a call is accepted from this display, select Disabled to prevent the speech channel being opened. This does not affect the functionality on any other display or call/display unit.
EMERGENCY TONE:	EMERG ONLY EMERG + PRIOR	This controls the call types which are sounded with the rapid 'beep..beep..beep' alarm tone. Select **Emergency Only** or **Emergency and Priority** call types**.**

www.sensorium.co.uk

L762 Call/Display - Call Point Menu Settings

Due to the large number of settings, the L762 menu is divided into two sections, this second section deals with the Call Point Menu only. Ensure the Menu Enable jumper is fitted to the rear of the unit and press and hold the '**Reset**' button then press and hold the '**Talk**' button, simultaneously for 10 seconds. To change the displayed option, press the '**Reset**' button. To move to the next item, press the '**Talk**' button. *While in the menu mode, the unit will not respond to system activity.*

Menu	Default Settings	Description
SELECT MENU	CALL POINT	Select DISPLAY to enter the display mode configuration, or select CALL POINT to enter the call point mode configuration.
CALL+RST BUTTON	EMERGENCY	Select the desired call type generated when the Call & Reset button are activated simultaneously.
CALL+RST ID	000	Select the required User ID generated when the Call & Reset buttons are activated simultaneously.
CALL BUTTON	CALL	Select the call type generated when the Call button is activated.
CALL BUTTON ID	000	Select the User ID generated when the Call button is activated.
JACK SOCKET	CALL	Select the call type generated when the Pear Lead is activated.
JACK SOCKET ID	000	Select the User ID generated when the Pear Lead is activated.
X1 INPUT TYPE	CALL	Select the call type generated when the X1 Input is activated.
X1 INPUT ID	251	Select the User ID generated when the X1 Input is activated.
X2 INPUT TYPE	EMERGENCY	Select the call type generated when the X2 Input is activated.
X2 INPUT ID	251	Select the User ID generated when the X2 Input is activated.
X3 INPUT TYPE	RESET	Select the call type generated when the X3 Input is activated.
X3 INPUT ID	252	Select the User ID generated when the X3 Input is activated.
X4 INPUT TYPE	EMERGENCY	Select the call type generated when the X4 Input is activated.
X4 INPUT ID	253	Select the User ID generated when the X4 Input is activated.
X5 INPUT TYPE	NURSE PRESENT	Select the call type generated when the X5 Input is activated.
X5 INPUT ID	254	Select the User ID generated when the X5 Input is activated.
AUDIO END TALK	END_TALK = ACCEPT END_TALK = RESET	This setting controls how this call point behaves when the conversation is terminated at a display unit. Select End_Talk = Accept and this call point will become an accepted call, Select End_Talk = Reset and this call point will reset.
PRIORITY UPGRADE	ENABLED DISABLED	Select Enabled to allow a standard call from this call point to upgrade to a priority call using the system timers as configured on the power supply. Select Disabled to prevent the upgrade.
LIGHT PATTERNS	ENGLISH	Configured this units' LEDs to suit various international market conditions.

www.sensorium.co.uk

L748 LED Display Menu Settings

The L748 Call/Display has a unique menu structure, based on the standard display menu, but with additional functions relating specifically to this unit. Access to the display menus is obtained by using the two hidden buttons located on the front panel. Please refer to page 31 for more information. Access to the menus is obtained by; pressing and holding down the 'Show Staff' button. While holding down the 'Show Staff' button, press and hold the 'Accept Call' button. After holding both buttons down for 10 seconds, you should gain access to the menus. To change the displayed option, press the '**Show Staff**' button. To move to the next item, press the '**Accept Call**' button. When the display is showing the last menu item (DEFAULT TEXT), one more press of the 'Accept Call' will return the unit to normal operating mode. *Please note while in the menu mode, the unit will not respond to system activity.* This unit can only be configured as a slave display and must receive the zoning information from a master display set to the same display address.

Menu	Settings	Description
DISPLAY ADD: 00	00 to 07	Sets the **Display Address** of the unit. When display address 1 or above is selected, the menu will jump to 2ND TONE LO ADD. **This Unit can only be configured as a slave display and must receive the zoning information from a master display set to the same display address.**
ZONE A LO: 001	001 to 215	Select the Lowest call point address for zone switch position A. *This function is available only when the display is set to Display Address 00.*
ZONE A HI: 215	001 to 215	Select the Highest call point address for zone switch position A. *This function is available only when the display is set to Display Address 00.*
ZONE B LO: 001	001 to 215	Select the Lowest call point address for zone switch position B. *This function is available only when the display is set to Display Address 00.*
ZONE B HI: 215	001 to 215	Select the Highest call point address for zone switch position B. *This function is available only when the display is set to Display Address 00.*
ZONE C LO: 001	001 to 215	Select the Lowest call point address for zone switch position C. *This function is available only when the display is set to Display Address 00.*
ZONE C HI: 215	001 to 215	Select the Highest call point address for zone switch position C. *This function is available only when the display is set to Display Address 00.*
2ND TONE LO: OFF	OFF / 001 to 215	Select the Lowest call point address for the Second Tone alarm setting. *This range operates in addition to the zone windows above.*
2ND TONE HI: OFF	OFF / 001 to 215	Select the Highest call point address for the Second Tone alarm setting. *This range operates in addition to the zone windows above.*
SHOW CALLS: ON	ON / OFF	When ON, this display will show all calls on the system but will only sound the audible alarm for calls in the current zone.
EMERG CALLS: ALL	ALL / OWN	Select "All" to allow this display to show and sound for Emergency and Attack calls in all zones on the system. "Own Zone Only" will not show or sound for Emergencies or Attack calls on other zones.
CALL LEVEL: ALL	ALL / ONE / TWO	Select "All" to allow this display to respond for all call levels, Select "One" to ignore Emergency and Attack Calls. Select "Two" to ignore all calls other than Emergency and Attack calls. *This function over-rides all other settings on this display.*
DEFAULT TEXT: OFF	ON / OFF	Select "ON" to show the top line of the default text in quiescent mode eg "INTERCALL". Select "OFF" to clear the display in quiescent mode. *A single red led will continue to flash indicating unit operational.*

www.sensorium.co.uk

L672 Dementia Controller Menu Settings

The L672 Dementia Controller contains sixteen pre-set profiles which can be selected to suit the individual client behaviour and altered as their needs change. The following table shows the amount of time which will pass before an alarm is generated. To change the current profile, press an hold both buttons down on the unit for approximately 10 seconds. After this delay PROFILE: will be displayed, press the left hand button to increment the number (the number rolls around from 00 to 16) and select the right hand button to store the new profile.

Profile	Out Of Bed Alarm	Ensuite Alarm	Room Alarm	Door 1 (Corridor)	Door 2 (Patio)	Ensuite Light Usher
0	Immediate	N/A	N/A	Immediate	Immediate	N/A
1	2 Min	1 Min	30 Sec	Immediate	Immediate	50 Sec
2	3 Min	2 Min	30 Sec	Immediate	Immediate	1:45 Min
3	4 Min	2 Min	1 Min	Immediate	Immediate	1:45 Min
4	5 Min	3 Min	2 Min	Immediate	Immediate	2:30 Min
5	5 Min	4 Min	1 Min	Immediate	Immediate	3:30 Min
6	8 Min	5 Min	2 Min	Immediate	Immediate	4:30 Min
7	8 Min	5 Min	3 Min	Immediate	Immediate	4:30 Min
8	10 Min	6 Min	2 Min	Immediate	Immediate	5 Min
9	10 Min	6 Min	3 Min	Immediate	Immediate	5 Min
10	10 Min	8 Min	1 Min	Immediate	Immediate	7 Min
11	15 Min	5 Min	10 Min	Immediate	Immediate	4:30 Min
12	15 Min	10 Min	5 Min	Immediate	Immediate	8:30 Min
13	15 Min	N/A	N/A	10 Sec	10 Sec	N/A
14	20 Min	10 Min	10 Min	Immediate	Immediate	9 Min
15	20 Min	N/A	N/A	10 Sec	5 Sec	N/A
16	30 Sec	10 Sec	10 Sec	Immediate	Immediate	20 Sec
17	Light Timer: 20-100 secs / Alarm Timer: 2-30 mins			Immediate	Immediate	N/A
18	Bed Light Off Delay: 0-120 secs / Alarm Timer: 0.5-30 mins			Immediate	Immediate	N/A

The following examples show the profiles in operation.

Profile 1-15. As soon as the resident gets out of bed, the WC light will illuminate and the resident can be out of bed for 2 minutes before raising the alarm, however, should he remain out of bed and in the room for more than 30 seconds **[Room Alarm]**, the alarm will sound. If he is longer than 1 minute in the ensuite **[Ensuite Alarm]** the alarm will sound. The Ensuite light will dim and the bed light will illuminate 50 seconds after the resident entered the WC **[Ensuite Light Usher]** to usher the resident back to the bedroom and back into bed.

Profile 16 is a demonstration profile with short duration timers. As soon as the resident gets out of bed, the WC light will illuminate and the resident can be out of bed for 30 seconds before raising the alarm, however, should he remain out of bed and in the room for more than 15 seconds **[Room Alarm]**, the alarm will sound. If he is longer than 15 seconds in the ensuite **[Ensuite Alarm]** the alarm will sound. The Ensuite light will dim and the bed light will illuminate 8 seconds after the resident entered the WC **[Ensuite Light Usher]** to usher the resident back to the bedroom and back into bed.

Profile 17 is a simplified profile where the bed occupancy sensor is replaced with a PIR located near the bed to detect when the resident gets out of bed. When the bed PIR is activated, both Room and WC lights are switched on and will remain on for the time period programmed into the **[Light Timer]**, setting (between 20 and 100 seconds) If any PIR inputs are activated, this time period is extended, keeping the lights on, all the time resident movement is detected. In the event that the lights remain on above the programmable **[Alarm Timer]** setting (2 to 30 minutes) the alarm will be raised.

Profile 18 is a simple profile which only uses the bed occupancy sensor and does not require any PIR detectors. When the resident gets out of bed, both Room and WC lights are switched on. Should the resident remain out of bed for more than the **[Alarm Timer]** setting, the alarm will be raised and the lights will remain on. If the resident returns to bed before the Alarm Timer has expired the lights will switch off after the [**Bed Light Off Delay**] setting.

Door Alarm.
It is not possible to set the door alarm while either door is in the open condition.

www.sensorium.co.uk

L672 Dementia Controller Menu Settings

The menu structure allows the unit configuration to be changed at any time. The Menu enable jumper must be fitted to the rear of the unit to gain access to the following menus which proceed after the Profile choice.

Profile	Settings	Description
SELECT PROFILE: 00	00 to 18	Sixteen preset profiles which can be selected to suit the individual occupants normal behaviour patterns. *Please refer to the profile table for more information on specific timings for each profile*
BED SENSOR DELAY	OFF / 02 / 04 / 08 *(Seconds)*	This setting allows a delay to be introduced from the bed sensor before the dementia controller detects an out of bed condition. The range is none (00) 2,4 or 8 seconds.
ROOM ALARM TYPE	CALL / PRIORITY / EMERGENCY	Selects the type of call generated by the room profile alarm. The menu structure prevents the doors from being set to a lower call level than the room.
X4 ALARM TYPE	*CALL / *PRIORITY / EMERGENCY	Selects the type of call generated by the X4 CORRIDOR DOOR contact & X5 PATIO DOOR contact. **The menu structure prevents the doors from being set to a lower alarm type than the room*. If the Room Alarm Type is set to Call, the door alarm may be set to Call, Priority or Emergency. If the Room Alarm Type is set to Priority, the door alarm may be set to Priority or Emergency. If the Room Alarm Type is set to Emergency, the door alarm can only be set to Emergency.
X5 ALARM TYPE	*CALL / *PRIORITY / EMERGENCY	
ROOM USER ID	OFF – 254	Selects the User ID generated by the room profile alarm. This can be used to generate a secondary address from the room for example "BEDROOM 10 DEMENTIA ALARM"
X4 USER ID	OFF – 254	Selects the User ID generated by the X4 Door Contact input. This can be used to generate a secondary address from the room for example "BEDROOM 10 CORRIDOR DOOR"
X5 USER ID	OFF – 254	Selects the User ID generated by the X5 Door Contact input. This could be used to generate a secondary address from the room for example "BEDROOM 10 PATIO DOOR"
ALARM RELAY	ON / OFF	The unit is fitted with an auxiliary relay to trigger third party alarm systems and pager systems. This is disabled by default.
AUTO OFF TIMER	OFF, 5- 12 Hours	The unit can automatically switch off after a number of hours. For example it is switched on when the resident is put to bed but automatically switches off in the morning. The range is between 5 and 12 hours.
BED SENSOR CPR	ON / OFF	When used in conjunction with later versions of the Intercall Call Management Software, the out of bed activity is silently monitored by the software. However, this function is not compatible with earlier systems and must be disabled.
MIN ENSUITE TIME	00,02,04,08 Secs	Selects the minimum length of time that the Ensuite PIR will need to be activated before the light switch-over & cue timer is enabled. This allows alteration of the ensuite/room detection performance.
AUTO RESET	ON / OFF	Once the room alarm is activated, if the resident returns to be the bed the unit can be configured to automatically reset the room alarm. This function can be disabled so a member of staff must visit to reset the room alarm at the Dementia Controller.
RELAY 4	DOOR ONLY /ROOM ONLY /DOOR & ROOM/ DOOR OR ROOM	Relay 4 operates when part or all of the Dementia Controller is enabled as options on left. This can be used to switch the light control automatically between normal light switches (ie during the day) and the Dementia Controller (ie at night time)
CALL POINT ID	OFF – 254	Selects the User ID generated by the X6 and X7 Slave Call Point. This can be used to generate a secondary address from the room for example "BEDROOM 10 CALL POINT"
BED OCCUPIED	CONTACT CLOSED CONTACT OPEN	Select the polarity of the X1 Bed Sensor input. Bed Mats are normally Contact Closed when the bed is occupied. The input can be set to Contact Open for different bed sensor types.
ALARM TIMER [Profile 17+18 only]	02 - 30 Minutes	If the PIR's are continuously activated for this period of time, the unit generates a Room Alarm. This setting is only available and only applies to Profile 17+18.
LIGHT TIMER [Profile 17 only]	10 – 100 Seconds	The Light Timer is the length of time the lights remain on after the last PIR activation is detected. This setting is only available and only applies to Profile 17.
BED LIGHT OFF DELY [Profile 18 only]	0 – 120 Seconds	The Bed Light Off Delay sets the length of time the lights remain on after the resident is back in the bed. This setting only applies to Profile 18.

www.sensorium.co.uk

Zoning Configuration.

The **INTERCALL** system features comprehensive zoning facilities which can cope with most zoning requirements. The principle of zoning is to enable calls to be displayed only in the area from which they originate. This could be achieved by installing separate systems but this does not provide 'master' displays where all calls can be shown or the ability to display emergency 'crash' calls throughout the building to alert other members of staff.

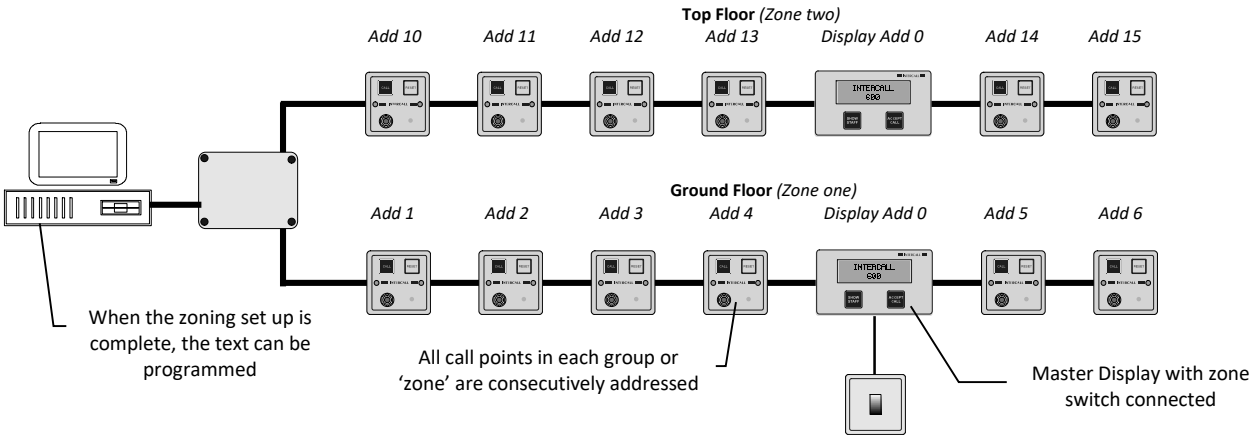

With the INTERCALL system, the zoning is configured and controlled by the display units. They have terminals for the zone switch and built in menu functions, which are used to configure the zone requirements. When a system is zoned, we must concentrate on the call point addresses and disregard the text that is associated to that address as this will need to be re-programmed when the system is commissioned.

Additional Equipment Required.

If a system is to be zoned, you will need to re-program the text. See page 55 *Custom Configuration* for more information. If the zoning configuration is to be changed by the staff (e.g Day/Night operation) we will need a zone switch or time switch for automatic switching.

Call Points

When a system is zoned, we effectively have call points in separate groups which are to be treated as the zones. *(See the diagram above)* All the call points in each group must have consecutive addresses.

Display Units

We also have displays arranged in groups these are called **display addresses**. All displays in the same group must be set to the same **display address**. The **zone switch** is connected to one display in each group, this display is the **master display** for that group.

Zone Switch

The **Zone Switch** is simply a closing contact, which is connected to the chosen **master display** for each **display address** group. It may be a simple manual switch, time switch or automatic closing contact. If the contact is open circuit, then all displays in that **display address** group are 'global' and they will respond to all call points on the system. This 'global' mode is often used as one of the zone settings.

Display Address Windows

The mechanism by which the zoning is programmed at the LCD Displays, is based around three **address windows**, these are called 'Zone A', 'Zone B' and 'Zone C'. Each **address window** has a 'Lower Address' setting and a 'Higher Address' setting. When the 'Zone Switch' is operated, it selects either global (all addresses) or one of the three **address windows**. Pages 28 and 36 detail the connections to be made on the LCD Display units which select the **address window** which that group of addresses will use. Page 57 details the setting of the **address windows** 'Zone A', 'Zone B' and 'Zone C'.

Display Menu - Display Address 00.

There are 16 available display addresses from 00 to 15. When display address 00 is used, the settings for the address windows 'Zone A', 'Zone B' and 'Zone C' are set up individually on all displays. This allows displays to be controlled by a single switch, but to have different address window settings.

Display Menu - Display Address 01 to 07.

When display addresses 01 to 07 are used, the settings for the address windows 'Zone A', 'Zone B' and 'Zone C' are set up on the master display and transmitted to all other displays on the same **display address**. When using display address 01 to 07, only the master display can access the 'Zone A', 'Zone B' and 'Zone C' settings within the display menu. These display addresses must be used when **Remote Sounders** are required to be zoned.

www.sensorium.co.uk

Display Menu - Second Tone.
The **Second Tone** may be considered as an additional **address window**. Any active call point within the Second Tone Low and High address range will make the LCD Display sound (Using the solid alternative alarm tone) regardless of the zone settings. This is ideally used for exit doors or specific call points which are to be alerted throughout all zones.

Display menu - Show All Calls.
This setting allows calls from all zones to be displayed, but only calls within the selected **address window** will sound the audible alarm tone. This function can be enabled or disabled at each display within the display menu settings.

Display menu – Priority Calls. – Selected Products Only.
This setting allows priority calls from all zones outside the selected **address window** to be displayed and generate the audible alarm tone. This function can be set to 'All Zones' which will show and sound for priority calls from all zones on the system or 'Own Zone Only' which will not show priority calls outside the **address window**.

Display menu – Emergency Calls.
This setting allows emergency calls from all zones outside the selected **address window** to be displayed and generate the audible alarm tone. This function can be set to 'All Zones' or 'Own Zone Only' which will not show emergency calls outside the **address window**.

Display menu – Accept Attack Calls.
This setting allows attack calls to be accepted on the display using the accept button. This function is specific to the each display and prevents unauthorized reset of attack calls where displays are in vulnerable or common locations.

Remote Sounders
The Remote Sounder only features basic zoning facilities and we recommend using LCD displays rather than Remote Sounders where a system is to be zoned. Remote Sounders pick up the zoning information from a **master display** unit set to the same **display address**. When zoning Remote Sounders, you must use display Address 01 to 15 and set up the address window values on the master display. The **display address** is set up on the Remote Sounder using DIL switches.

Power Supplies.
Zoning does not affect the quantity or location of power supply units on the system. This must be calculated in accordance with the Wiring Limitation. (See page 12)

Overdoor Lights.
Zoning does not affect the operation of the overdoor lights. They may be set to a manual **address window** with the use of two sets of DIP switches which set the 'lower' and 'higher' address limits. See page 32 for more information.

Thermal Printer and Universal Interface (L747).
The L747 Interface and Thermal Printer will record all system activity regardless of zoning. See page **Error! Bookmark not defined.**

Alphanumeric Pagers and Universal Interface (L747).
The L747 Interface and Alphanumeric Pagers will record all system activity regardless of zoning. The L747 can be configured so that only emergency or attack calls are sent to the pagers. Special order L747s are available which offer zoned paging configurations.

PC Logging and Alphanumeric Paging.
By using the Call Management Software, it is possible to zone individual alphanumeric pagers to any number of zones and using it with the Intercall 700 system, it is possible to 'route' specific call types, locations or users to specific alphanumeric pagers.

Text Programming.
Once the zone set up is complete, the call point text can be programmed into the power supply and downloaded to the system.

www.sensorium.co.uk

Zoning – Example 1.

In the example below, we have 2 zones with 9 call points and 2 display units on each zone. They are to be operated independently and the LCD Displays are only to show calls local to the zone. The 'Options' described below allow for this to be switched (say for day/night staffing levels) and to allow emergency or 'attack' calls to be shown on all zones.

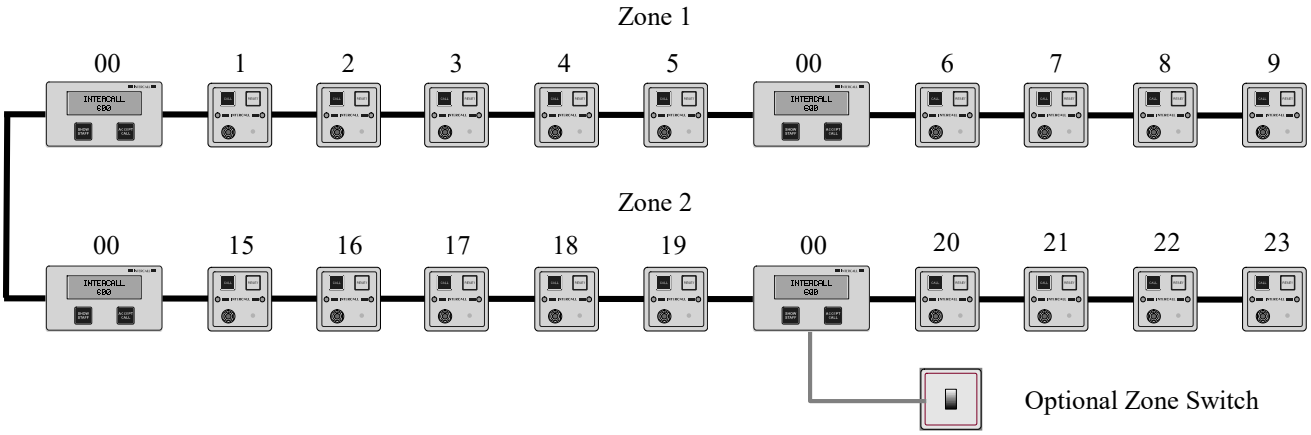

Setting up the Call Points.

- Set up call points on the first zone with consecutive addresses. *The zone 1 example above starts at address 1 and continues to address 9.*
- Leaving a gap to allow for future expansion, set up call points on the second zone with consecutive addresses. *The zone 2 example above starts at address 15 and continues to address 23.*
- Continue the above procedure on all further zones, leaving gaps for future expansion between all zones. *The zone 3 example above starts at address 30 and continues to address 38.*

Setting up the LCD Display Units.

- Set up **all** displays in zone 1 as follows:
- **DISPLAY ADDRESS 00**. *We wish the displays in both zone 1 and zone 2 to be switched together, so we have used the same **display address** on all LCD displays. As we are using **display address 0** the **address window** settings will need to be set up on all displays.*
- **ZONE A LOW ADD 1,ZONE A HIGH ADD 9.** *This **address window** 'Zone A' is set to receive only local calls from zone 1.*

- Set up **all** displays in zone 2 as follows:
- **DISPLAY ADDRESS 00**. *We wish the displays in both zone 1 and zone 2 to be switched together, so we have used the same **display address** on all LCD displays.*
- **ZONE A LOW ADD 15,ZONE A HIGH ADD 23.** *This **address window** 'Zone A' is set to receive only local calls from zone 1.*

Zone Connection.

- Select one LCD Display to be the 'master' *(It can be any display in any zone and in the example above it is one of the displays on zone 2)* and connect the terminals on the rear of the unit to select **address window A**. For information on the connections for the zone switch, please refer to page 28

Options.

- Should you wish to switch the zone (Say in the daytime, you wish to see all calls on all displays and at night time the calls are only displayed locally) Connect a switch to select either 'global' or **address Window A**
- If you set the all display menus to **EMERGENCY CALLS = ALL ZONES,** Then 'Emergency' or 'Attack' calls from either zone 1 or zone 2 will be shown on all LCD display units.
- If you set the all display menus to **PRIORITY CALLS = ALL ZONES,** Then Priority calls from either zone 1 or zone 2 will be shown on all LCD display units..
- If you want specific call points to show on a display regardless of the zone settings, set the **2ND TONE LOW** and **HI** window to encompass the call required device addresses.

Zoning – Example 2.

In the example below, we have 2 zones with 9 call points and 2 display units on each zone. There are two modes of operation; 1. Independently (LCD Displays show calls within the zone) and 2. All calls are shown in zone 2 but all LCD displays in zone 1 are silent and do not sound. Emergency calls are to stay within the local zone.

www.sensorium.co.uk

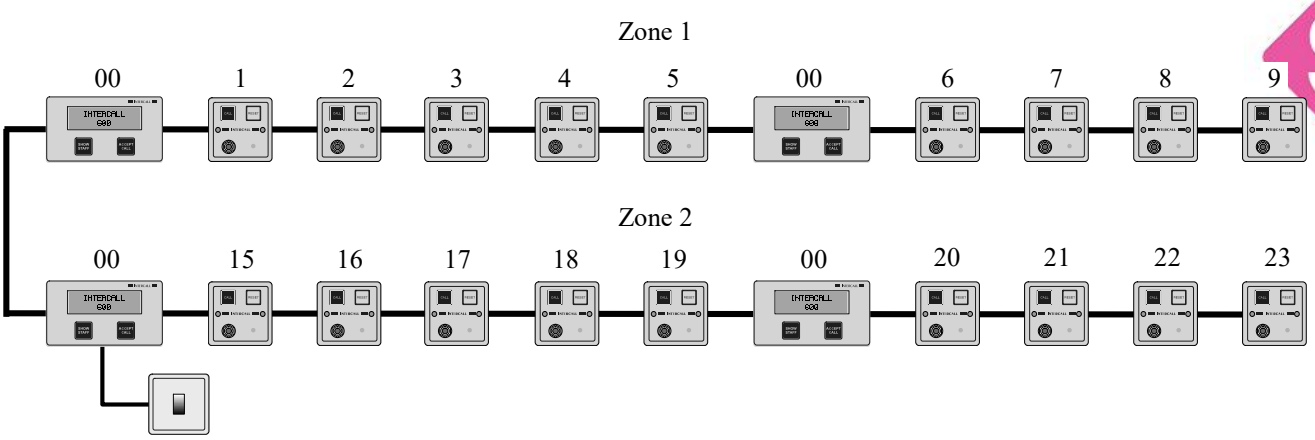

Call Points.

- Call points are set up with consecutive addresses in each zone, with a gap between zones as per example 1.

LCD Displays.

- Set up **all** displays in zone 1 as follows:
- **DISPLAY ADDRESS 00**. *We wish the displays in both zone 1 and zone 2 to be switched together, so we have used the same **display address** on all LCD displays. As we are using **display address 0** the **address window** settings will need to be set up on all displays.*
- **ZONE A LOW ADD 1,ZONE A HIGH ADD 9.** *We have set up two **address windows** on the LCD displays in zone 1. The first **address window** 'Zone A' is set to receive only local calls from zone 1.*
- **ZONE B LOW ADD 215,ZONE B HIGH ADD 215.** *The second **address window** is set up away from any call point address (at address 215) so when using the 'Zone B' setting, the display will not respond to any call.*
- **EMERGENCY CALLS = OWN ZONE ONLY.** *We have set Emergency calls = own zone only to prevent emergency calls crossing the **address window** settings. This will mean that in zone 1, when **address window** 'Zone B' is selected, no emergency calls will sound in zone 1.*

- Set up **all** displays in zone 2 as follows:
- **DISPLAY ADDRESS 00**. *We wish the displays in both zone 1 and zone 2 to be switched together, so we have used the same **display address** on all LCD displays.*
- **ZONE A LOW ADD 15,ZONE A HIGH ADD 23.** *We have set up two **address windows** on the LCD displays in zone 2. The first **address window** 'Zone A' is set to receive only local calls from zone 2.*
- **ZONE B LOW ADD 1,ZONE B HIGH ADD 23.** *The second **address window** is set up to receive calls from both zone 1 call points and zone 2 call points.*
- **EMERGENCY CALLS = OWN ZONE ONLY.** *We have set Emergency calls = own zone only to prevent emergency calls crossing the **address window** settings. This will mean that in zone 2, when **address window** 'Zone A' is selected, no emergency calls from zone 1 will sound in zone 2.*

Zone Switch.

- Connect the zone switch to select either 'Address Window A' or 'Address Window B'. *When the zone switch is operated, it will select the **address windows** which will be used by all the LCD display units, on both zones.* For information on the connections for the zone switch, please refer to page 28

Options

- If you set the all display menus to **EMERGENCY CALLS = ALL ZONES,** Then 'Emergency' or 'Attack' calls from either zone 1 or zone 2 will be shown on all LCD display units.
- If you set the all display menus to **PRIORITY CALLS = ALL ZONES,** Then Priority calls from either zone 1 or zone 2 will be shown on all LCD display units.
- If you want specific call points to show on a display regardless of the zone settings, set the **2ND TONE LOW** and **HI** window to encompass the call required device addresses.

www.sensorium.co.uk

Zoning – Example 3.

In the example below, we have 2 zones with 8 call points, 2 display units and one remote sounder on each zone. There is a zone switch in each zone which controls the displays in the local zone only. There are two modes of operation; **1.** LCD Displays and Remote Sounders show/sound for calls within their own zone only, and **2.** Show calls /sound for calls from zone 1 and 2 on the local displays and sounders.

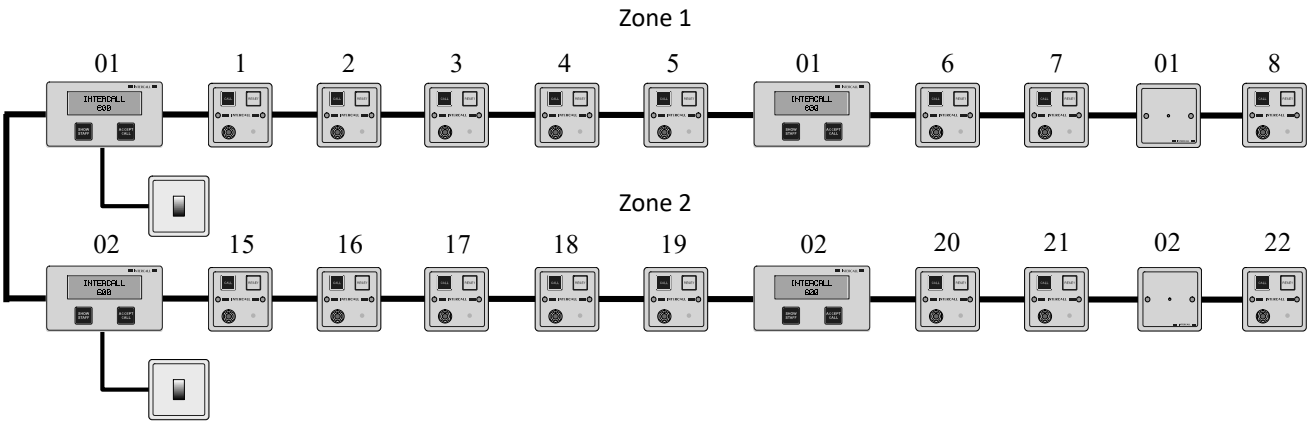

Call Points.

- Call points are set up with consecutive addresses in each zone, with a gap between zones as per example 1.

LCD Displays.

- Set up the master display in zone 1 as follows:
- **DISPLAY ADDRESS 01**. *We wish all displays in zone 1 to be switched together, but not affect the displays in the other zones. As we are using **display address 1** the **address window** settings can only be set on the **master display** and all other displays, and remote sounders, set to **display address 1** will pick up the settings.*
- Set: **ZONE A LOW ADD 1,ZONE A HIGH ADD 8.** *The first **address window** 'Zone A' is set to receive only local calls from zone 1.*
- Set: **ZONE B LOW ADD 1,ZONE B HIGH ADD 22.** *The second **address window** 'Zone B' is set to receive calls from both zone 1 and zone 2.*
- Set: **ZONE C LOW ADD 215,ZONE C HIGH ADD 215.** *The second **address window** is set up away from any call point address (at address 215) so when using the 'Zone B' setting, the displays will not respond to any call.*
- Set the Remote Sounder to **display address 01.** *The remote sounders will pick up the **address window** settings which are entered into the master display set to **display address** 1 in zone 1.*

- Set up the master display in zone 2 as follows:
- **DISPLAY ADDRESS 02.** *We wish all displays in zone 2 to be switched together, but not affect the displays in zone 1.*
- Set: **ZONE A LOW ADD 15,ZONE A HIGH ADD 22.** *The first **address window** 'Zone A' is set to receive only local calls from zone 2. As we are using **display address 2** the **address window** settings can only be set on the master display and all other displays, and remote sounders, set to **display address 2** will pick up the settings.*
- Set: **ZONE B LOW ADD 1,ZONE B HIGH ADD 22.** *The second **address window** 'Zone B' is set to receive calls from both zone 1 and zone 2.*
- Set the Remote Sounder to **display address 02.** *The remote sounders will pick up the **address window** settings which are entered into the master display set to **display address** 2 in zone 2.*

Zone Switches.

- Connect a zone switch in each zone to select either 'Address Window A' or 'Address Window B'. *When the zone switch is operated, it will select the **address windows** for all displays in the local zone only. It will not affect displays in the other zone.* For information on the connections for the zone switch, please refer to page 28

If you do not wish to switch the zone setting but you wish to use Remote Sounders, fit links to the master displays in zone 1 and zone 2 to permanently select 'Address window A' and enter the settings into the master displays.

www.sensorium.co.uk

Zoning – Example 4.

In the example below, we have 3 zones with 10 call points and 2 display units on each zone. There is a three position zone switch in each zone which controls the displays in the local zone only. There are three modes of operation; 1. Independently (LCD Displays show calls within the zone) 2. Show calls from all zones on the local displays. 3. Local displays to show no calls from any zone.

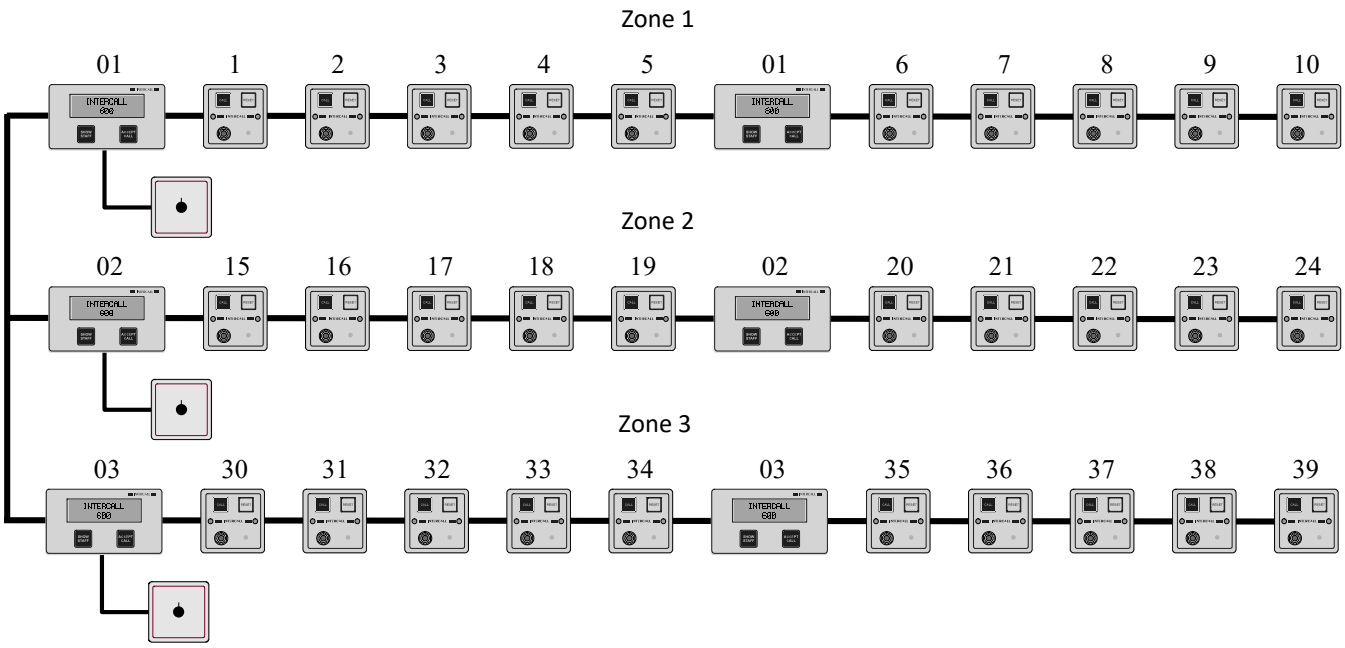

Call Points.

- Call points are set up with consecutive addresses in each zone, with a gap between zones as per example 1.

LCD Displays.

- Set up the master display in zone 1 as follows:
- **DISPLAY ADDRESS 01**. *We wish all displays in zone 1 to be switched together, but not affect the displays in the other zones. As we are using* ***display address 1*** *the* ***address window*** *settings can only be set on the* ***master display*** *and all other displays set to* ***display address 1*** *will pick up the settings.*
- Set: **ZONE A LOW ADD 1,ZONE A HIGH ADD 10.** *The first* ***address window*** *'Zone A' is set to receive only local calls from zone 1.*
- Set: **ZONE B LOW ADD 1,ZONE B HIGH ADD 39.** *The second* ***address window*** *'Zone B' is set to receive calls from zones 1,2 and 3.*
- Set: **ZONE C LOW ADD 215,ZONE C HIGH ADD 215.** *The third* ***address window*** *is set up away from any call point address (at address 215) so when using the 'Zone C' setting, the displays will not respond to any call.*

- Set up the master display in zone 2 as follows:
- **DISPLAY ADDRESS 02**. *We wish all displays in zone 2 to be switched together, but not affect the displays in the other zones. As we are using* ***display address 2*** *the* ***address window*** *settings can only be set on the* ***master display*** *and all other displays set to* ***display address 2*** *will pick up the settings.*
- Set: **ZONE A LOW ADD 15,ZONE A HIGH ADD 24.** *The first* ***address window*** *'Zone A' is set to receive only local calls from zone 2.*
- Set: **ZONE B LOW ADD 1,ZONE B HIGH ADD 39.** *The second* ***address window*** *'Zone B' is set to receive calls from zones 1,2 and 3.*
- Set: **ZONE C LOW ADD 215,ZONE C HIGH ADD 215.** *The third* ***address window*** *is set up away from any call point address (at address 215) so when using the 'Zone C' setting, the displays will not respond to any call.*

Zoning example 4 continues on the next page…..

www.sensorium.co.uk

- Set up the master display in zone 3 as follows:
- **DISPLAY ADDRESS 03**. *We wish all displays in zone 2 to be switched together, but not affect the displays in the other zones. As we are using **display address 3** the **address window** settings can only be set on the **master display** and all other displays set to **display address 3** will pick up the settings.*
- Set: **ZONE A LOW ADD 30,ZONE A HIGH ADD 39.** *The first **address window** 'Zone A' is set to receive only local calls from zone 3.*
- Set: **ZONE B LOW ADD 1,ZONE B HIGH ADD 39.** *The second **address window** 'Zone B' is set to receive calls from zones 1,2 and 3.*
- Set: **ZONE C LOW ADD 215,ZONE C HIGH ADD 215.** *The third **address window** is set up away from any call point address (at address 215) so when using the 'Zone C' setting, the displays will not respond to any call.*

Zone Switches.

- Connect a three position zone switch in each zone to select either 'Address Window A' , 'Address Window B' or 'Address window C'. *When the zone switch is operated, it will select the **address windows** for all displays in the local zone only. It will not affect displays in the other zone.* For information on the connections for the zone switch, please refer to page 28

The above example will require a three position zone switch, prices and availability are available on request. As there are 16 independent display addresses, the above could be repeated up to a maximum of 16 zones. As one of the three settings on the zone switch is 'sound for calls in all zones', we could use the 'global' setting as one of the three positions and we would have the 'Zone C' setting available for another range of call points.

Options

- If you set the all display menus to **EMERGENCY CALLS = ALL ZONES,** Then 'Emergency' or 'Attack' calls from either zone 1 or zone 2 will be shown on all LCD display units.
- If you set the all display menus to **PRIORITY CALLS = ALL ZONES,** Then Priority calls from either zone 1 or zone 2 will be shown on all LCD display units.
- If you want specific call points to show on a display regardless of the zone settings, set the **2ND TONE LOW** and **HI** window to encompass the call required device addresses.
- If a 'supervisors' display was required to show all call activity but only sound for emergencies, this is simply added anywhere on the network cabling and set to **SOUND FOR = EMERGENCY CALLS ONLY**. Obviously, it could be set to sound for all calls if required.

We hope that the examples have given an insight into some of the possibilities with the Intercall system of zoning. But if you wish to discuss your zoning requirements, please contact your supplier or the factory technical support department.

www.sensorium.co.uk

IMPORTANT

EVERY CALL POINT MUST BE SET TO A UNIQUE ADDRESS.

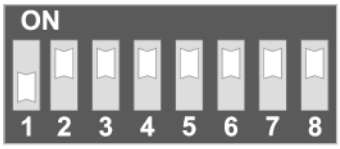

Duuuuuuu

Address 1

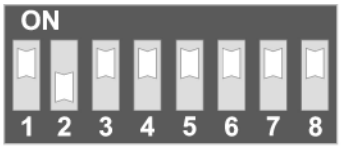

uDuuuuuu

Address 2

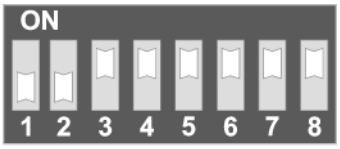

DDuuuuuu

Address 3

Factory Text Page 1 of 2.

SWITCHES	ADD	TEXT MESSAGE
Duuuuuuu	001	ADDRESS 001
uDuuuuuu	002	ADDRESS 002
DDuuuuuu	003	ADDRESS 003
uuDuuuuu	004	ADDRESS 004
DuDuuuuu	005	ADDRESS 005
uDDuuuuu	006	ADDRESS 006
DDDuuuuu	007	ADDRESS 007
uuuDuuuu	008	ADDRESS 008
DuuDuuuu	009	ADDRESS 009
uDuDuuuu	010	ADDRESS 010
DDuDuuuu	011	ADDRESS 011
uuDDuuuu	012	ADDRESS 012
DuDDuuuu	013	ADDRESS 013
uDDDuuuu	014	ADDRESS 014
DDDDuuuu	015	ADDRESS 015
uuuuDuuu	016	ADDRESS 016
DuuuDuuu	017	ADDRESS 017
uDuuDuuu	018	ADDRESS 018
DDuuDuuu	019	ADDRESS 019
uuDuDuuu	020	ADDRESS 020
DuDuDuuu	021	ADDRESS 021
uDDuDuuu	022	ADDRESS 022
DDDuDuuu	023	ADDRESS 023
uuuDDuuu	024	ADDRESS 024
DuuDDuuu	025	ADDRESS 025
uDuDDuuu	026	ADDRESS 026
DDuDDuuu	027	ADDRESS 027
uuDDDuuu	028	ADDRESS 028
DuDDDuuu	029	ADDRESS 029
uDDDDuuu	030	ADDRESS 030
DDDDDuuu	031	ADDRESS 031
uuuuuDuu	032	ADDRESS 032
DuuuuDuu	033	ADDRESS 033
uDuuuDuu	034	ADDRESS 034
DDuuuDuu	035	ADDRESS 035
uuDuuDuu	036	ADDRESS 036
DuDuuDuu	037	ADDRESS 037
uDDuuDuu	038	ADDRESS 038
DDDuuDuu	039	ADDRESS 039
uuuDuDuu	040	ADDRESS 040
DuuDuDuu	041	ADDRESS 041
uDuDuDuu	042	ADDRESS 042
DDuDuDuu	043	ADDRESS 043
uuDDuDuu	044	ADDRESS 044
DuDDuDuu	045	ADDRESS 045
uDDDuDuu	046	ADDRESS 046
DDDDuDuu	047	ADDRESS 047
uuuuDDuu	048	ADDRESS 048
DuuuDDuu	049	ADDRESS 049
uDuuDDuu	050	ADDRESS 050
DDuuDDuu	051	ADDRESS 051
uuDuDDuu	052	ADDRESS 052
DuDuDDuu	053	ADDRESS 053

SWITCHES	ADD	TEXT MESSAGE
uuDDuDDu	108	ADDRESS 108
DuDDuDDu	109	ADDRESS 109
uDDDuDDu	110	ADDRESS 110
DDDDuDDu	111	ADDRESS 111
uuuuDDDu	112	ADDRESS 112
DuuuDDDu	113	ADDRESS 113
uDuuDDDu	114	ADDRESS 114
DDuuDDDu	115	ADDRESS 115
uuDuDDDu	116	ADDRESS 116
DuDuDDDu	117	ADDRESS 117
uDDuDDDu	118	ADDRESS 118
DDDuDDDu	119	ADDRESS 119
uuuDDDDu	120	ADDRESS 120
DuuDDDDu	121	ADDRESS 121
uDuDDDDu	122	ADDRESS 122
DDuDDDDu	123	ADDRESS 123
uuDDDDDu	124	ADDRESS 124
DuDDDDDu	125	ADDRESS 125
uDDDDDDu	126	ADDRESS 126
DDDDDDDu	127	ADDRESS 127
uuuuuuuD	128	ADDRESS 128
DuuuuuuD	129	ADDRESS 129
uDuuuuuD	130	ADDRESS 130
DDuuuuuD	131	ADDRESS 131
uuDuuuuD	132	ADDRESS 132
DuDuuuuD	133	ADDRESS 133
uDDuuuuD	134	ADDRESS 134
DDDuuuuD	135	ADDRESS 135
uuuDuuuD	136	ADDRESS 136
DuuDuuuD	137	ADDRESS 137
uDuDuuuD	138	ADDRESS 138
DDuDuuuD	139	ADDRESS 139
uuDDuuuD	140	ADDRESS 140
DuDDuuuD	141	ADDRESS 141
uDDDuuuD	142	ADDRESS 142
DDDDuuuD	143	ADDRESS 143
uuuuDuuD	144	ADDRESS 144
DuuuDuuD	145	ADDRESS 145
uDuuDuuD	146	ADDRESS 146
DDuuDuuD	147	ADDRESS 147
uuDuDuuD	148	ADDRESS 148
DuDuDuuD	149	ADDRESS 149
uDDuDuuD	150	ADDRESS 150
DDDuDuuD	151	ADDRESS 151
uuuDDuuD	152	ADDRESS 152
DuuDDuuD	153	ADDRESS 153
uDuDDuuD	154	ADDRESS 154
DDuDDuuD	155	ADDRESS 155
uuDDDuuD	156	ADDRESS 156
DuDDDuuD	157	ADDRESS 157
uDDDDuuD	158	ADDRESS 158
DDDDDuuD	159	ADDRESS 159
uuuuuDuD	160	ADDRESS 160
DuuuuDuD	161	ADDRESS 161

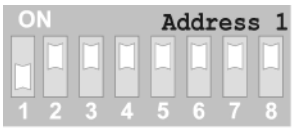

Duuuuuuu

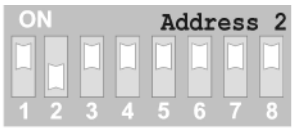

uDuuuuuu

DDuuuuuu

uuDuuuuu

u=Switch UP towards ON D = Switch DOWN away from ON EVERY DEVICE MUST HAVE A UNIQUE ADDRESS

www.sensorium.co.uk

SWITCHES	ADD	TEXT MESSAGE
uDDuDDuu	054	ADDRESS 054
DDDuDDuu	055	ADDRESS 055
uuuDDDuu	056	ADDRESS 056
DuuDDDuu	057	ADDRESS 057
uDuDDDuu	058	ADDRESS 058
DDuDDDuu	059	ADDRESS 059
uuDDDDuu	060	ADDRESS 060
DuDDDDuu	061	ADDRESS 061
uDDDDDuu	062	ADDRESS 062
DDDDDDuu	063	ADDRESS 063
uuuuuuDu	064	ADDRESS 064
DuuuuuDu	065	ADDRESS 065
uDuuuuDu	066	ADDRESS 066
DDuuuuDu	067	ADDRESS 067
uuDuuuDu	068	ADDRESS 068
DuDuuuDu	069	ADDRESS 069
uDDuuuDu	070	ADDRESS 070
DDDuuuDu	071	ADDRESS 071
uuuDuuDu	072	ADDRESS 072
DuuDuuDu	073	ADDRESS 073
uDuDuuDu	074	ADDRESS 074
DDuDuuDu	075	ADDRESS 075
uuDDuuDu	076	ADDRESS 076
DuDDuuDu	077	ADDRESS 077
uDDDuuDu	078	ADDRESS 078
DDDDuuDu	079	ADDRESS 079
uuuuDuDu	080	ADDRESS 080
DuuuDuDu	081	ADDRESS 081
uDuuDuDu	082	ADDRESS 082
DDuuDuDu	083	ADDRESS 083
uuDuDuDu	084	ADDRESS 084
DuDuDuDu	085	ADDRESS 085
uDDuDuDu	086	ADDRESS 086
DDDuDuDu	087	ADDRESS 087
uuuDDuDu	088	ADDRESS 088
DuuDDuDu	089	ADDRESS 089
uDuDDuDu	090	ADDRESS 090
DDuDDuDu	091	ADDRESS 091
uuDDDuDu	092	ADDRESS 092
DuDDDuDu	093	ADDRESS 093
uDDDDuDu	094	ADDRESS 094
DDDDDuDu	095	ADDRESS 095
uuuuuDDu	096	ADDRESS 096
DuuuuDDu	097	ADDRESS 097
uDuuuDDu	098	ADDRESS 098
DDuuuDDu	099	ADDRESS 099
uuDuuDDu	100	ADDRESS 100
DuDuuDDu	101	ADDRESS 101
uDDuuDDu	102	ADDRESS 102
DDDuuDDu	103	ADDRESS 103
uuuDuDDu	104	ADDRESS 104
DuuDuDDu	105	ADDRESS 105
uDuDuDDu	106	ADDRESS 106
DDuDuDDu	107	ADDRESS 107

SWITCHES	ADD	TEXT MESSAGE
uDuuuDuD	162	ADDRESS 162
DDuuuDuD	163	ADDRESS 163
uuDuuDuD	164	ADDRESS 164
DuDuuDuD	165	ADDRESS 165
uDDuuDuD	166	ADDRESS 166
DDDuuDuD	167	ADDRESS 167
uuuDuDuD	168	ADDRESS 168
DuuDuDuD	169	ADDRESS 169
uDuDuDuD	170	ADDRESS 170
DDuDuDuD	171	ADDRESS 171
uuDDuDuD	172	ADDRESS 172
DuDDuDuD	173	ADDRESS 173
uDDDuDuD	174	ADDRESS 174
DDDDuDuD	175	ADDRESS 175
uuuuDDuD	176	ADDRESS 176
DuuuDDuD	177	ADDRESS 177
uDuuDDuD	178	ADDRESS 178
DDuuDDuD	179	ADDRESS 179
uuDuDDuD	180	ADDRESS 180
DuDuDDuD	181	ADDRESS 181
uDDuDDuD	182	ADDRESS 182
DDDuDDuD	183	ADDRESS 183
uuuDDDuD	184	ADDRESS 184
DuuDDDuD	185	ADDRESS 185
uDuDDDuD	186	ADDRESS 186
DDuDDDuD	187	ADDRESS 187
uuDDDDuD	188	ADDRESS 188
DuDDDDuD	189	ADDRESS 189
uDDDDDuD	190	ADDRESS 190
DDDDDDuD	191	ADDRESS 191
uuuuuuDD	192	ADDRESS 192
DuuuuuDD	193	ADDRESS 193
uDuuuuDD	194	ADDRESS 194
DDuuuuDD	195	ADDRESS 195
uuDuuuDD	196	ADDRESS 196
DuDuuuDD	197	ADDRESS 197
uDDuuuDD	198	ADDRESS 198
DDDuuuDD	199	ADDRESS 199
uuuDuuDD	200	ADDRESS 200
DuuDuuDD	201	ADDRESS 201
uDuDuuDD	202	ADDRESS 202
DDuDuuDD	203	ADDRESS 203
uuDDuuDD	204	ADDRESS 204
DuDDuuDD	205	ADDRESS 205
uDDDuuDD	206	ADDRESS 206
DDDDuuDD	207	ADDRESS 207
uuuuDuDD	208	ADDRESS 208
DuuuDuDD	209	ADDRESS 209
uDuuDuDD	210	ADDRESS 210
DDuuDuDD	211	ADDRESS 211
uuDuDuDD	212	ADDRESS 212
DuDuDuDD	213	ADDRESS 213
uDDuDuDD	214	ADDRESS 214
DDDuDuDD	215	ADDRESS 215

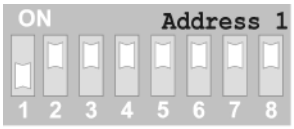

Duuuuuuu

uDuuuuuu

DDuuuuuu

uuDuuuuu

u=Switch UP towards ON D = Switch DOWN away from ON EVERY DEVICE MUST HAVE A UNIQUE ADDRESS

www.sensorium.co.uk

L717 System Configuration Switch Settings

On the L717 Power Supply, the global system features are controlled by a bank of DIL switches. The switches are shown to the right and **[ON]** is upwards (towards the word ON) and **[OFF]** is down (away from the word ON). The tables below details the available settings. **The L7700 Power Supply settings are configured using the embedded website.**

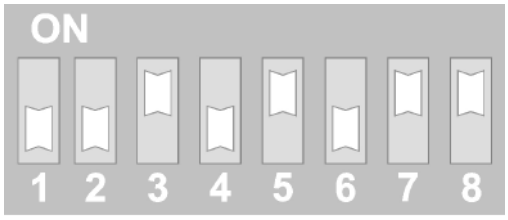

ON = UP OFF = Down

* Do not use
these settings simultaneously

***L717 Power Supply* CONFIGURATION SWITCH SETTINGS**				
SW3	**SW4**	**SW5**	**Time for Accepted calls to return to their calling state**	**Time for an un-answered call to become a Priority call**
ON	ON	ON	1 Minute & 30 Seconds	2 Minutes & 30 Seconds
OFF	ON	ON	2 Minutes	3 Minutes & 30 Seconds
ON	OFF	ON	3 Minutes	2 Minutes & 30 Seconds
OFF	OFF	ON	4 Minutes	2 Minutes & 30 Seconds
ON	ON	OFF	1 Minute & 30 Seconds	6 Minutes & 30 Seconds
OFF	ON	OFF	2 Minutes	Never turn into a Priority call
ON	OFF	OFF	3 Minutes	3 Minutes & 30 Seconds
OFF	OFF	OFF	4 Minutes	Never turn into a Priority call

SW	**SWITCH ON**	**SWITCH OFF**
SW1	Manual staff present feature only [Reset Button Present/Reset toggle]	Automatic Staff Present Feature only** [Reset Button Reset only]
SW2	Disable call point follower sounder	Enable call point follower sounder
SW6	No lost addresses logged by displays	lost addresses logged on displays
SW7	Show location + User ID on system	User ID disabled
SW8	Disable Nurse Present Auto Expiry Timer [Fixed at 10 minutes]	Enable Preset Auto Expiry Timer [Manual Reset Only]

www.sensorium.co.uk

L744 RFID Door Monitoring & Access Control Point Programming & Configuration.

The L744 RFID Door Monitoring an Access Control Point is programmed using a Laptop running the **Intersniff** software. The laptop must be connected to the LAN or directly to the L7700 IP Power Supply which is powering the L744 Door Monitoring Point. There is a single page dedicated to the L744 Call Point, accessed from the SysX page and the details are shown below. Intersniff is free and can be downloaded from the Intercall ftp site, contact the technical help line for information.

VERY IMPORTANT

1. Initially perform a **Reboot Device** to ensure you are communicating with the correct unit.
2. You must perform a **Reboot Device** after sending your new configuration.

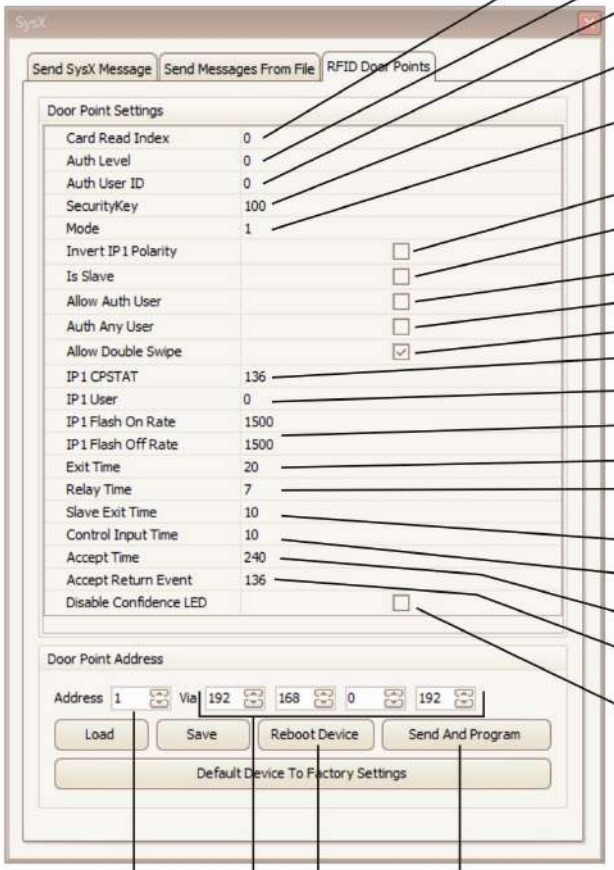

Card Read Index where the card is shared with other manufacturers equipment the location of data can be moved in the card memory.

Authorisation Level Cards must have a higher number than this *Auth Level* to operate this Call Point.

Authorisation User ID A single card with this User ID can also operate this call point. *This can be used where a residents card can operate their own door unit only*. You must also tick **Allow Auth User** to use this feature.

Security Key Cards & Call Points must share the same security key to operate. Warning; you cannot read this number back from the Card or Call Point if changed.

Mode 1: Exit Timer enabled & optional Double Swipe to allow door to be held open, unit re-arms when door is closed.
Mode 2: Simple Swipe ON / Swipe OFF mode, door can be opened and closed unlimited times while unit is isolated.

Invert Input Polarity Tick to use Normally Closed contacts on the door.

Is Slave Tick to configure this unit as a Slave. When two units work together, on each side of a door, one unit operates in slave mode. - See ***Slave Exit Timer*** below.

Allow Auth User Tick to allow the **Auth User ID** entered above to operate this unit.

Auth Any User Tick to allow any Intercall programmed card to operate this unit.

Allow Double Swipe *(Mode 1 only)* Tick to allow door to be held open with second card swipe.

Cpstat Type of call generated from the door alarm **(136=Call 138=Emerg 139=Priority)**

User User ID generated from the door alarm.

Flash Rate How the Red LED will flash on this unit when it is in alarm.

Exit Time Maximum amount of time allowed for the door to be open.

Relay Time This is the maximum length of time the relay will operate. Once the door is open the relay will deactivate regardless of the relay time. If the door is not opened within the *Relay Time*, the unit will reset.

Slave Exit Time *(Slave Mode only)* When the unit is operating as a slave, sets the exit timer on the Slave unit only.

Control Input Time Minimum *(Master Mode Only)* number of seconds that the SLAVE input will operate once activated. For example if using a button as a slave, one press will isolate the unit for 10 seconds.

Accept Time When accepted at the displays, number of seconds the unit will remain accepted before returning to calling condition. LED flashing remains as programmed for alarm above.

Accept Return Event When the unit returns from the accepted state, this selects the new event, which could be priority or emergency for example.

Confidence LED Tick to disable the blue 'heartbeat' pulse.

Send and Program - When you have finished, select this button to send your configuration to the device.

Reboot Device - You must perform a device reboot after sending the configuration.

IP Address of the L7700 Controller, to which the device is attached.

DIP Switch Address for the device to be configured.

www.sensorium.co.uk

Fault Finding Guide

Common Call Point Faults

FAULT	CAUSE	CURE
F1. Red Led on continuously or sounder beeping continuously or red and greed leds showing continuously.	Illegal Switch Setting	Set Call Point Switches See Pages 27 (600) or Page 39 (700) and page 72
F2. Will not reset See also F9	Ceiling pull switch faulty (i.e. shorted) Ceiling pull switch wiring short circuit Latching pull switch fitted Pear Lead faulty (i.e. shorted)	Disconnect or eliminate pull switch Disconnect or eliminate wiring. Must be momentary pull switch Remove Pear Lead
F3. Call Point does not show or sound on display F4. Call Point shows incorrect call type See also F6	Two call points set to the same address No power to call point or network volts too low Two Master power supplies on the wiring Address windows not set up correctly on LCD(s)	All call points *must* have a unique address Check if call point Red Led is flashing. Only one master power supply per system. Remove all zone links & try again or check set-up. Refer to page 58 for zoning configuration
F5. Call Point Red Led flashes twice then goes into green flashing	Call point receives accept signal on the network	Usually due to short on the Network. Damp Network Cable Damaged Network Cable Call Accepted at display Display accept button stuck down
F6. Call Address changes when calling but OK for Present/Visit. [L622Mk1 ONLY]	L output shorted to 0v. **L622Mk1 ONLY – All other call points do not use the same circuit**	Remove L connection from call point.
F7. Call Point sounds on display but LCD reads "1 " *[Call Number but no text]*	No text has been programmed for that address. Call point on wrong address [see fault F3,F8]	If this is on all displays check programming sheet If only on one display, download text from PSU.
F8. Wrong address shows when Call Point calling If L622 then see fault F6	Wrong text has been programmed for that address DIP Switches incorrectly set on call point Faulty DIP switch on call point If L622 then see fault F6	If this is on all displays check programming sheet Re-check DIP Switches Replace or eliminate call point.
F9. Call Point randomly "Ghost Calls" See Also F2	Ceiling pull switch damp (condensation or leak) Damaged wiring on "X" connection Damaged pear lead or plug Excessive electrical 'noise' or static on site	Check ceiling pull switch Check Wiring.. Remove or replace pear lead Check site or contact supplier for filter units.

Common Display Faults

FAULT	CAUSE	CURE
F10. Liquid Crystal Display totally blank	No power to display	Check connections with a meter.
F11. LCD reads Vx.xx or SWxxxx continuously	Excessive volt drop on Network cable Network Cable Short No input to Booster PSU Master PSU not running	Must measure minimum 9Volts at Network Cable. Remove or eliminate part(s) of the system
F12. Display Shows calls but does not sound Call F13. See also F3	Display set up to sound for Emergency calls only Display Zoning set incorrectly DAY or NIGHT alarm level set at minimum	See page 57 See page 28 or 36
F14. Display will not accept calls.	Feature disabled in the display menu Wrong type of system (IE L628 running on L717PSU) Excessive Cable Capacitance on the system	See page 57 See page 3
F15. Display will not accept text download F16. Display text corrupted	Wrong type of system (IE L628 running on L717PSU) Battery must be fitted to the PSU when downloading	See page 3 Download text from Master PSU directly
F17. Display menu text corrupted	Units connected the Network with power connected	Unit will need to be returned to the factory or re-programmed using the LIM device.
F18. Display Reads “UNIT FAILURE” on lower line of LCD	Network devices are continuously monitored by the display units. Should a device be removed from the system, it will show as a UNIT FAILURE on the LCD screens.	Investigate missing units (if several units possibly fuse blown in FJB unit) Reset Power Supply to clear list of unit failures. [Note that by resetting the power supply, you are removing the unit failures from memory and they are no longer monitored]
F19. Display Reads “SYSTEM FAULT” on lower line of LCD	There is a fault from the Master Power Supply. The status LED’s on the master Power Supply will indicate the fault.	The status LED’s on the master Power Supply will indicate the particular fault. (ie Mains Failure, DC Failure etc) The Intercall IP Power Supply is fitted with a LCD unit to identify faults.
Display sounds single tone (not warble)	Second Tone setting active	Disabled in display menu See page 57
Cannot gain access to address windows within menus	Display not in master mode	See pages 28,36 & 58

Common L717 Power Supply Faults

FAULT	CAUSE	CURE
F20. PSU Yellow LED not illuminated	No mains power connected Transformer damaged during installation	Check Supply.
F21. PSU Green LED not illuminated	1 Amp fuse blown PCB damaged during installation	Check fuse.
F22. Master PSU Red LED not flashing	Network short	Remove or eliminate Network spurs
F23. PCB Sounder beeping continuously	Network Device connections reversed Flat Battery* Output Overloaded PCB damaged during installation ** The Power Supply is not designed to re-charge a completely flat battery & operate the call system simultaneously. Completely flat batteries must be charged using a specialist Sealed Lead Acid battery charger or a power supply which has no external load connected.*	Use battery charger to re-charge battery or replace battery. Max Load 100 Current Units per PSU
F24. Master PSU Beeper Sounding once per second and PSU Yellow LED Not Illuminated	Unit running from back up battery	Check mains incoming supply
F25. No output from booster	No input connected to booster No output from master Supply. Check Yellow & Green LED's	Check cable from master to booster.
F26. No Output from master power supply	Network Cable Short Network Device connections reversed PSU Output Power Transistor Damaged	Remove or eliminate Network Spurs
F27. Display text corrupted after download	Text corrupted within power supply. Battery must be connected when downloading	Connect to computer and re-program.

FAULT	CAUSE

Capacitance Faults (Data Corruption)

F28. Emergency calls don't say "EMERGENCY!" on bottom line	Network cable cores 'Doubled up' – see page 12
F29. Wrong type of call displayed (Assistance shows as normal call)	Damp Network cables or unit(s)
F30. Call type changing (Bleep changes from assist to call with only 1 call up)	Booster unit required
F31. Printer printing several 'lost' then 'reset' devices	Two Call Points with the same address – see page 71
F32. Pager (Alphanumeric) bleeping with lost devices.	Damaged Network Cable.
F33. Calls cannot be accepted. (Display 'Lock's up')	
F34. Q' or 'q' appears on display when call(s) accepted	
F35. Calls come and go on the LCD display	

Volt Drop Faults (Low Network Volts)

F36. LCD Beeper faint/ display keeps resetting (See Fault F11)	Excessive cable runs. – see page 12
F37. Call points reset spuriously.	Short down long cable run.

Audio Faults

It is very important to be sure that the system is fully functional and that all digital features are working correctly before attempting to locate and rectify audio faults.

F38. Speech dropping out after a few seconds.	Capacitance on Network cabling see above.
F39. One way speech to or from call point.	Faulty unit – try substitution with another call point or display.
F40. One way speech to or from display.	Two call points set to the same address.
F41. Feedback between call point & display.	Gain control set too high. Call Point and display too close or 'back to back' on a stud partition.
F42. Buzzing on audio channel when open	Connection between Digital [+/-] and Audio [a/b] Belden cable not used as recommended Cable damage Damp or wet Network Cable Faulty Audio Unit Poor Connection.